REINTJES
POWERTRAIN SOLUTIONS

PRODUCT GUIDE
2021 | MARINE

Index

Gearbox Characteristics ..... **4 – 15**

Options **16**

Hybrid **18**

PTO **20**

Auxiliary drives **24**

Important Notes **26**

Marine Duty Profiles **27**

REINTJES Gearboxes ..... **28 – 127**

Continuous Duty ..... **28 – 77**
WAF 164L – 274 28
WAF 344L – 464 30
WAF 474L – 675 32
WAF 743L – 1143 34
WAF 1143 – 1973 36
WAF 2346 – 5666 38
WAF 5666 – 7760 40
WGF 563 – 4566 42
AF 264 – 1143 44
AF 1143 – 1563 46
AF 2365 – 2375 48
LAF 543 – 763L 50
LAF 763 – 1163 52
LAF 1163 – 1973 54
LAF 2346 – 4566 56
LAF 4575 – 7760 58
VLJ 1130 - 7541 60
VA 2451 – 4941 62
SVA 630B – 900A 64
SVA 900-6A – 1050-6A 66
SVA 1120B – 1200-6A 68
SVAL 850-88B – 1120-88 70
SVAL 1120-88 – 1250-11 72
DLG 1113 – 110131 74
RDGL 200 – RDG 500 76

Medium Duty ..... **78 – 95**
WAF 164L – 274 78
WAF 274 – 464L 80
WAF 464L – 563 82
WVS 234/1 – 930/1 84
WVS 930/1 – 2240 86
AF 264 – 364 88
WLS 234/1 – 1130 90
WLS 1540 – 1930 92
VLJ 430 – 930/1 94

Light Duty ..... **96 – 111**
WAF 164L – 274L 96
WAF 274 – 444 98
WAF 464L – 563 100
WVS 234/1 – 1130L 102
WVS 1130L – 2240 104
AF 264 – 364 106
WLS 234/1 – 1930 108
VLJ 730/1 – 930/1 110

Pleasure Duty ..... **112 – 127**
WAF 164L – 274 112
WAF 344L – 464 114
WAF 474L – 563 116
WVS 234/1 – 1130L 118
WVS 1130L – 2240 120
AF 264 – 364 122
WLS 234/1 – 1130 124
VLJ 730/1 – 930/1 126

Main Dimensions ..... **128 – 176**
WAF/WVS/WLS/LAF ..... 128 – 147
VA ..... 146 – 149
SVA ..... 148 – 151
DLG ..... 150 – 153
RDG/RDGL 154
VLJ ..... 156 – 159
Hybrid System WAF ..... 158 – 171
Hybrid System WVS ..... 172 – 175
Frequency Converter 176

Marine Propulsion Packages ..... **178 – 181**

Navy Applications **182**

Type Classification **184**

This document and the technical data contained herein are subject to technicalmodifications and are non-binding. The data serve informational purposes and cannot be guaranteed in any way. In addition, our gearboxes will be assessed and determined individually for each project. This is necessary due to differing characteristics of each project like specific site and operational conditions. If this document is delivered in another language than English and in case of divergences of interpretation between the different language texts, the English text shall prevail.

Gearbox standard design dry. Following lists only show an extract of gearboxes available. Additional sizes, offset configurations and variations are available on request.

Dimensions and dry weights are approximate and may vary with housing or by input and ratio. Specifications are subject to change without notice. Please contact your REINTJES distributor for current information and binding data.

Gearbox Characteristics

WAF	
Gearbox type:	Reverse reduction gearbox
Main application:	Workboats
Driven component:	Fixed Pitch Propeller
Shaft rotation:	Co- or Counter-rotating shafts
Reduction ratios:	Standard and custom (on request)
Shaft arrangement:	Parallel input and output shafts on opposite sides, vertically offset (standard)
Clutch(es):	Hydraulically operated clutch(es)
Bearing type:	Roller bearings (standard) or Slide bearings (large sizes, on request)
Gearbox housing:	Steel / Cast iron design
Mounting:	Free-standing / close-coupled with SAE housings (small sizes)
Propulsion system:	Diesel-mechanic, hybrid ready (optional)

WGF	
Gearbox type:	Reverse reduction gearbox with attached gear step
Main application:	Workboats
Driven component:	Fixed Pitch Propeller
Shaft rotation:	Co- or Counter-rotating shafts
Reduction ratios:	Standard and custom (on request)
Shaft arrangement:	Parallel input and output shafts on opposite sides, vertically offset (standard)
Clutch(es):	Hydraulically operated clutch(es)
Bearing type:	Roller bearings
Gearbox housing:	Steel / Cast iron design
Mounting:	Free-standing
Propulsion system:	Diesel-mechanic, hybrid ready (optional)

Horizontal offset on request.

WGV	
Gearbox type:	Reverse reduction gearbox
Main application:	Workboats
Driven component:	Fixed Pitch Propeller
Shaft rotation:	Co- or Counter-rotating shafts
Reduction ratios:	Standard and custom (on request)
Shaft arrangement:	Co-axial, intermediate shafts offset
Clutch(es):	Hydraulically operated clutch(es)
Bearing type:	Roller bearings
Gearbox housing:	Steel / Cast iron design
Mounting:	Free-standing
Propulsion system:	Diesel-mechanic, hybrid ready (optional)

WVS	
Gearbox type:	Reverse reduction gearbox
Main application:	Fast vessels
Driven component:	Fixed Pitch Propeller
Shaft rotation:	Co- or Counter-rotating shafts
Reduction ratios:	Standard and custom (on request)
Shaft arrangement:	Parallel input and output shafts, U-drive or opposite sides, vertically offset (standard)
Clutch(es):	Hydraulically operated clutch(es)
Bearing type:	Roller bearings
Gearbox housing:	Aluminium alloy, weight optimized design
Mounting:	Free-standing / close-coupled / U-drive SAE housings (small sizes)
Propulsion system:	Diesel-mechanic, hybrid ready (optional)

Gearbox Characteristics

WVSA	
Gearbox type:	Reverse reduction gearbox
Main application:	Fast vessels
Driven component:	Fixed Pitch Propeller
Shaft rotation:	Co- or Counter-rotating shafts
Reduction ratios:	Custom (on request)
Shaft arrangement:	Down angle, shafts on opposite sides, vertically offset
Clutch(es):	Hydraulically operated clutch(es)
Bearing type:	Roller bearings
Gearbox housing:	Aluminium alloy, weight optimized design
Mounting:	Free-standing
Propulsion system:	Diesel-mechanic, hybrid ready (optional)

ZWAF	
Gearbox type:	Two-speed reverse reduction gearbox
Main application:	Workboats
Driven component:	Fixed Pitch Propeller
Shaft rotation:	Ahead: co-rotating shafts Astern: counter-rotating shafts
Reduction ratios:	Custom (on request)
Shaft arrangement:	Parallel input and output shafts on opposite sides, vertically offset (standard)
Clutch(es):	Hydraulically operated clutch(es)
Bearing type:	Roller bearings
Gearbox housing:	Steel / Cast iron design
Mounting:	Free-standing
Propulsion system:	Diesel-mechanic, hybrid ready (optional)

Horizontal offset on request.

ZWVS	
Gearbox type:	Two-speed reverse reduction gearbox
Main application:	Fast vessels
Driven component:	Fixed Pitch Propeller
Shaft rotation:	Ahead: co-rotating shafts Astern: counter-rotating shafts
Reduction ratios:	Custom (on request)
Shaft arrangement:	Parallel input and output shafts on opposite sides, vertically offset (standard)
Clutch(es):	Hydraulically operated clutch(es)
Bearing type:	Roller bearings
Gearbox housing:	Aluminium alloy, weight optimized design
Mounting:	Free-standing
Propulsion system:	Diesel-mechanic, hybrid ready (optional)

ZWVSA	
Gearbox type:	Two-speed reverse reduction gearbox
Main application:	Fast vessels
Driven component:	Fixed Pitch Propeller
Shaft rotation:	Ahead: counter-rotating shafts Astern: co-rotating shafts
Reduction ratios:	Custom (on request)
Shaft arrangement:	Down angle, U-drive, vertically offset
Clutch(es):	Hydraulically operated clutch(es)
Bearing type:	Roller bearings
Gearbox housing:	Aluminium alloy, weight optimized design
Mounting:	Free-standing
Propulsion system:	Diesel-mechanic, hybrid ready (optional)

Gearbox Characteristics

ZSVAL	
Gearbox type:	Two-speed reduction gearbox
Main application:	Workboats
Driven component:	Controllable Pitch Propeller
Shaft rotation:	Counter-rotating input and output shafts
Reduction ratios:	Custom (on request)
Shaft arrangement:	Parallel input and output shafts on opposite sides, vertically offset (standard)
Clutch(es):	Hydraulically operated clutch(es)
Bearing type:	Slide bearings
Gearbox housing:	Steel / Cast iron design
Mounting:	Free-standing
Propulsion system:	Diesel-mechanic, hybrid ready (optional)

AF	
Gearbox type:	Reduction gearbox
Main application:	Workboats, ideal for electric drive
Driven component:	Controllable or Fixed Pitch Propeller
Shaft rotation:	Counter-rotating input and output shafts
Reduction ratios:	Standard and custom (on request)
Shaft arrangement:	Parallel input and output shafts on opposite sides, vertically offset (standard)
Clutch(es):	None
Bearing type:	Roller bearings
Gearbox housing:	Steel / Cast iron design
Mounting:	Free-standing
Propulsion system:	Diesel-mechanic, hybrid ready (optional)

Horizontal offset on request.

LAF	
Gearbox type:	Reduction gearbox
Main application:	Workboats
Driven component:	Controllable Pitch Propeller
Shaft rotation:	Co- or Counter-rotating shafts
Reduction ratios:	Standard and custom (on request)
Shaft arrangement:	Parallel input and output shafts on opposite sides, vertically offset (standard)
Clutch(es):	Hydraulically operated clutch(es)
Bearing type:	Roller bearings
Gearbox housing:	Steel / Cast iron design
Mounting:	Free-standing / close-coupled with SAE housings (small sizes)
Propulsion system:	Diesel-mechanic, hybrid ready (optional)

LGF	
Gearbox type:	Reduction gearbox with attached gear step
Main application:	Workboats
Driven component:	Controllable Pitch Propeller
Shaft rotation:	Co- or Counter-rotating shafts
Reduction ratios:	Standard and custom (on request)
Shaft arrangement:	Parallel input and output shafts on opposite sides, vertically offset (standard)
Clutch(es):	Hydraulically operated clutch(es)
Bearing type:	Roller bearings
Gearbox housing:	Steel / Cast iron design
Mounting:	Free-standing
Propulsion system:	Diesel-mechanic, hybrid ready (optional)

Gearbox Characteristics

WLS	
Gearbox type:	Reduction gearbox
Main application:	Fast vessels
Driven component:	Controllable Pitch Propeller
Shaft rotation:	Co- or Counter-rotating shafts
Reduction ratios:	Standard and custom (on request)
Shaft arrangement:	Parallel input and output shafts, U-drive or opposite sides, vertically offset (standard)
Clutch(es):	Hydraulically operated clutch(es)
Bearing type:	Roller bearings
Gearbox housing:	Aluminium alloy, weight optimized design
Mounting:	Free-standing / close-coupled / U-drive SAE housings (small sizes)
Propulsion system:	Diesel-mechanic, hybrid ready (optional)

VLJ	
Gearbox type:	Reduction gearbox
Main application:	Waterjets
Driven component:	Jet Propulsion
Shaft rotation:	Counter-rotating input and output shafts
Reduction ratios:	Standard and custom (on request)
Shaft arrangement:	Parallel input and output shafts on opposite sides, vertically offset (standard)
Clutch(es):	Hydraulically operated clutch(es)
Bearing type:	Roller bearings (standard) or Slide bearings (large sizes, on request)
Gearbox housing:	Aluminium alloy
Mounting:	Free-standing
Propulsion system:	Diesel-mechanic, hybrid ready (optional)

Horizontal offset on request.

VA	
Gearbox type:	Reduction gearbox
Main application:	Workboats
Driven component:	Controllable Pitch Propeller
Shaft rotation:	Counter-rotating input and output shafts
Reduction ratios:	Custom (on request)
Shaft arrangement:	Parallel input and output shafts on opposite sides, vertically offset (standard)
Clutch(es):	None
Bearing type:	Roller bearings
Gearbox housing:	Steel / Cast iron design
Mounting:	Free-standing
Propulsion system:	Diesel-mechanic, hybrid ready (optional)

SVA	
Gearbox type:	Reduction gearbox
Main application:	Workboats
Driven component:	Controllable Pitch Propeller
Shaft rotation:	Counter-rotating input and output shafts
Reduction ratios:	Custom (on request)
Shaft arrangement:	Parallel input and output shafts on opposite sides, vertically offset (standard)
Clutch(es):	None
Bearing type:	Slide bearings
Gearbox housing:	Steel / Cast iron design
Mounting:	Free-standing
Propulsion system:	Diesel-mechanic, hybrid ready (optional)

Gearbox Characteristics

SVAL	
Gearbox type:	Reduction gearbox
Main application:	Workboats
Driven component:	Controllable Pitch Propeller
Shaft rotation:	Counter-rotating input and output shafts
Reduction ratios:	Custom (on request), two-speed versions available
Shaft arrangement:	Parallel input and output shafts on opposite sides, vertically offset (standard)
Clutch(es):	Hydraulically operated clutch(es)
Bearing type:	Slide bearings
Gearbox housing:	Steel / Cast iron design
Mounting:	Free-standing
Propulsion system:	Diesel-mechanic, hybrid ready (optional)

DLG	
Gearbox type:	Twin input / single output reduction gearbox
Main application:	Workboats, Ferries
Driven component:	Controllable Pitch Propeller
Shaft rotation:	Counter-rotating input and output shafts
Reduction ratios:	Custom (on request)
Shaft arrangement:	2 parallel input and 1 output shaft, horizontally offset (standard)
Clutch(es):	Hydraulically operated clutch(es)
Bearing type:	Rolling or slide bearings (size dependent)
Gearbox housing:	Steel / Cast iron design
Mounting:	Free-standing
Propulsion system:	Diesel-mechanic, hybrid ready (optional)

Horizontal offset on request.

DLGF	
Gearbox type:	Twin input shafts with attached gear step
Main application:	Workboats
Driven component:	Controllable Pitch Propeller
Shaft rotation:	Counter-rotating input and output shafts
Reduction ratios:	Custom (on request)
Shaft arrangement:	2 parallel input and 1 output shaft, horizontally offset (standard)
Clutch(es):	Hydraulically operated clutch(es)
Bearing type:	Rolling or slide bearings (size dependent)
Gearbox housing:	Steel / Cast iron design
Mounting:	Free-standing
Propulsion system:	Diesel-mechanic, hybrid ready (optional)

DUG	
Gearbox type:	Twin input / single output reduction gearbox
Main application:	Workboats, Ferries with electric drive
Driven component:	Controllable or Fixed Pitch Propeller
Shaft rotation:	Counter-rotating input and output shafts
Reduction ratios:	Custom (on request)
Shaft arrangement:	2 parallel input and 1 output shaft, horizontally offset (standard)
Clutch(es):	None
Bearing type:	Rolling or slide bearings (size dependent)
Gearbox housing:	Steel / Cast iron design
Mounting:	Free-standing
Propulsion system:	Electric propulsion

Gearbox Characteristics

DVLJ	
Gearbox type:	Twin input / single output reduction gearbox
Main application:	Waterjets
Driven component:	Jet Propulsion
Shaft rotation:	Counter-rotating input and output shafts
Reduction ratios:	Custom (on request)
Shaft arrangement:	2 parallel input and 1 output shaft, horizontally offset (standard)
Clutch(es):	Hydraulically operated clutch(es)
Bearing type:	Roller bearings
Gearbox housing:	Aluminium alloy
Mounting:	Free-standing
Propulsion system:	Diesel-mechanic, hybrid ready (optional)

RDG	
Gearbox type:	Reduction gearbox
Main application:	Dredgers
Driven component:	Dredger pump
Shaft rotation:	Counter-rotating input and output shafts
Reduction ratios:	Custom (on request)
Shaft arrangement:	Parallel input and output shafts on opposite sides, vertically offset (standard)
Clutch(es):	None
Bearing type:	Roller bearings
Gearbox housing:	Steel / Cast iron design
Mounting:	Free-standing
Propulsion system:	Electric propulsion

Horizontal offset on request.

RDGL	
Gearbox type:	Reduction gearbox
Main application:	Dredgers
Driven component:	Dredger pump
Shaft rotation:	Counter-rotating input and output shafts
Reduction ratios:	Custom (on request)
Shaft arrangement:	Parallel input and output shafts on opposite sides, vertically offset (standard)
Clutch(es):	Hydraulically operated clutch(es)
Bearing type:	Roller bearings
Gearbox housing:	Steel / Cast iron design
Mounting:	Free-standing
Propulsion system:	Electric propulsion

Options

Two speed gearboxes

- Two speed gearboxes based on standard gearboxes WAF, WVS, SVAL
- For available standard types and sizes see table:

	Gearbox type			
	ZWAF	ZWVS	ZSVAL	ZWVSA U
Gearbox Size	264	440	865-22	440
	364	730/1	950-77	
	563	930/1	1120-99	
	665			
	743			
	763			
	843			
	863			

- Main ratio based on basic gearbox
- Difference between main gear and 2nd gear: max. 15%
- Dimensioning of second gear acc. to customer/ on request
- For Power/speed ratios please refer to basic gearbox
- Additional sizes/types on request

ZWVSA 440 U

Technical Data:

■ Offset:	U-drive
■ Main gearbox ratio:	3.469 (other ratios available on request)
■ Gearbox ratio 2. gear:	3.083
■ Sense of rotation input side:	counter-clockwise
■ Sense of rotation output:	clockwise
■ Control valve:	electrical
■ Engine type.	admissible engine rating range (550 to 1,300 kW)
■ Admissible power/speed ratio:	0.54 kW/rpm
■ Gearbox foundation:	rigid/resilient on request

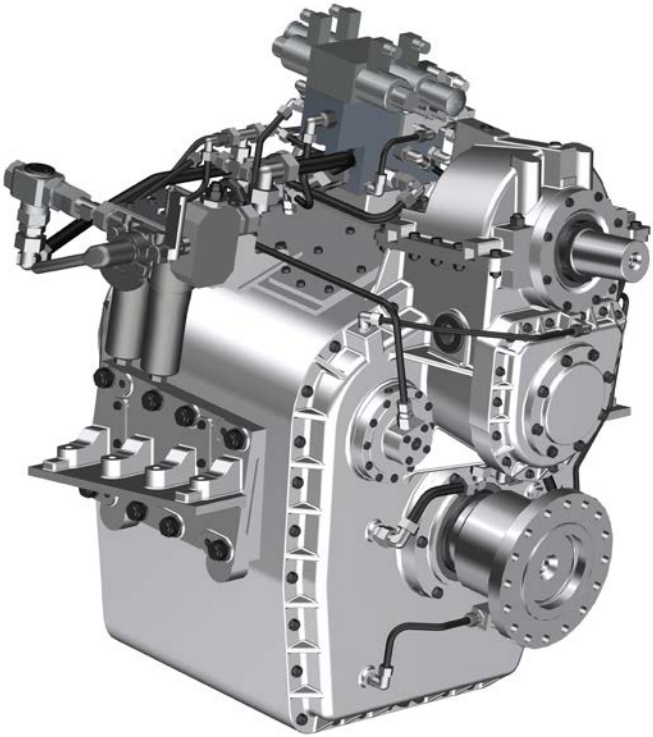

Hybrid

Hybrid ready gearboxes

- Hybrid ready gearboxes based on standard gearboxes WAF, WVS
- For available standard types and sizes see table:

	Gearbox type	
	WAF/LAF	WVS
Gearbox Size	344 – 573	730/1
	665 – 1143	930/1
	-	1540

Hybrid Systems

- Hybrid system consists of gearbox, electric motor, frequency converter
- System is compatible with various electric grids and configurable for different applications

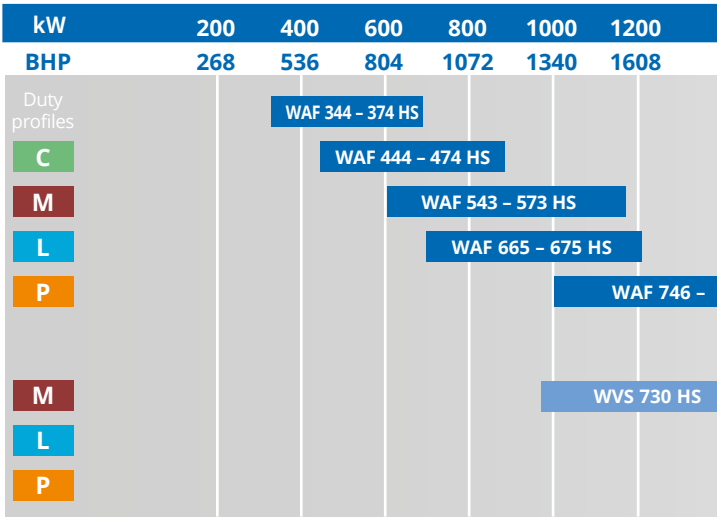

- Main ratio based on basic gearbox
- For Power/speed ratios please refer to basic gearbox
- Additional sizes/types on request
- Related electric motor and frequency converter as a system available on request
- Electrical power >630 ekW available on request
- for PTI or PTI + Boost or PTI/PTO or PTI/PTO + Boost

- PTI – PTO – PTH – Boost mode separately and combinations thereof
- Electric power available from 60 to 630 kW

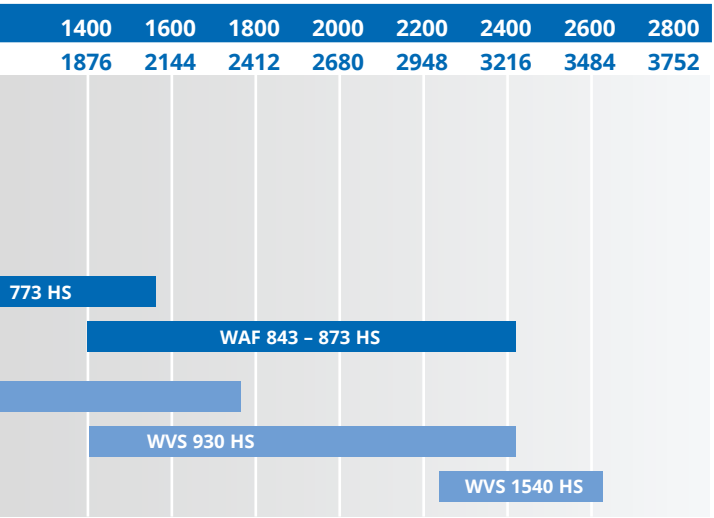

PTO

Functional matrix

PTO Type	Primary arrangement	Secondary arrangement	Controllable	PTO speed identical to engine speed	PTO speed different to engine speed (ratio i ≠ 1)
K21 A	X	–	–	X	–
K31 A	X	–	–	–	X
K31 B	–	X	–	–	X
K41 A	X	–	–	–	X
K41 B	–	X	–	–	X
K51 A	X	–	X	–	X
K51 B	–	X	X	–	X

All PTOs of bidirectional type (CCW-CW).
Further PTO arrangements on request.

K21A

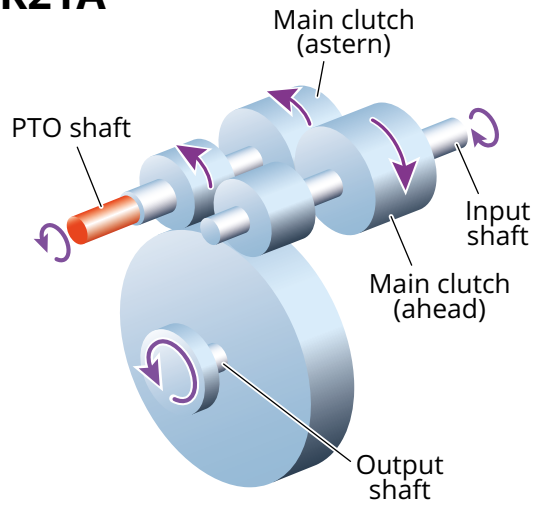

K31A

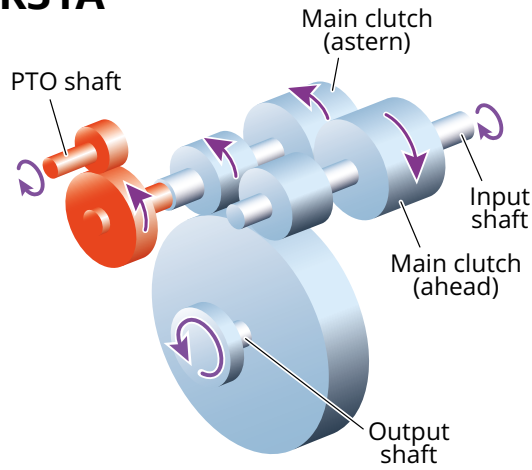
Main clutch
(astern)
PTO shaft
Input
shaft
Main clutch
(ahead)
Output
shaft

K31B

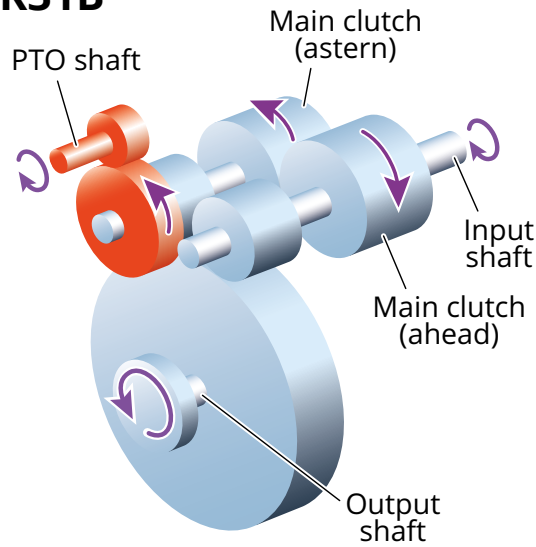
Main clutch
(astern)
PTO shaft
Input
shaft
Main clutch
(ahead)
Output
shaft

PTO

K41A

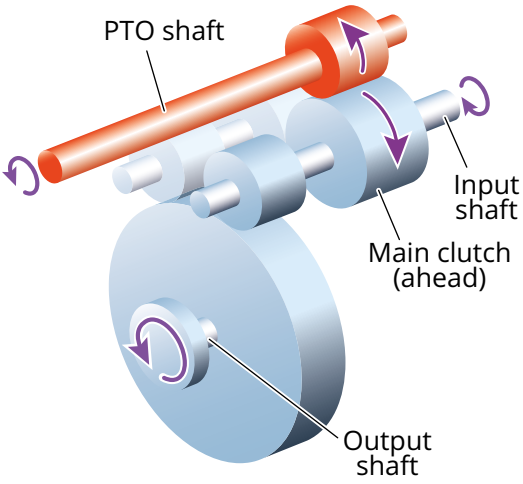

K41B

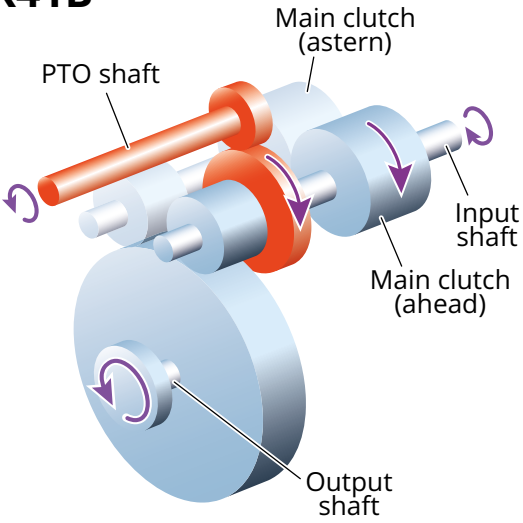

K51A

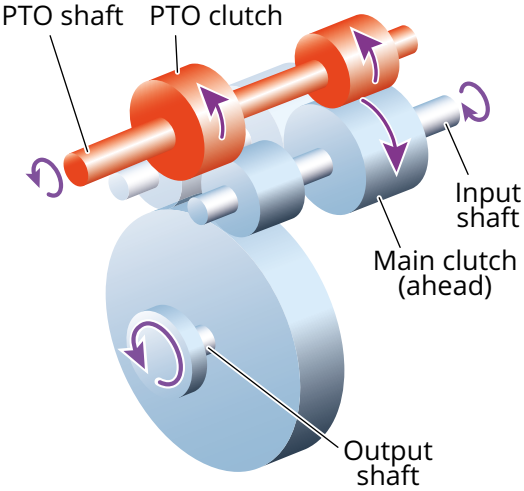
PTO shaft
PTO clutch
Input shaft
Main clutch (ahead)
Output shaft

K51B

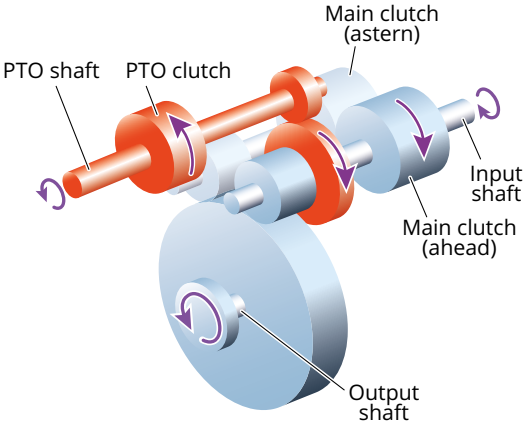
Main clutch (astern)
PTO shaft
PTO clutch
Input shaft
Main clutch (ahead)
Output shaft

Auxiliary drives

Technical Availability

- For standard PTO: refer to pages 20 – 25
- Primary PTO „A“: Aux drive turns, even if propeller not engaged
- Secondary PTO „B“: Aux drive turns only if propeller engaged
- Additional PTO-, PTI-, PTH functions on request
- Two speed PTI/PTH on request
- Additional pump drives on request

PTO Type	WAF 164	WAF 244 – 474	WAF 542 – 573	WAF 665 – 675	WAF/ LAF 743 – 1973
K21 A	X	X	X	X	X
K31 A	-	-	X	X	X
K31 B	-	X	X	-	-
K41 A	-	-	-	-	X
K41 B	-	-	-	-	-
K51 A	-	-	-	-	X
K51 B	-	-	-	-	-

	WAF/ LAF 2346 – 7770	WVS 234 – 2240	VLJ	DLG	SVA	SVAL	VA
		X	-	-	-	-	-
	-	X	X	-	-	-	-
	-	-	-	-	-	-	-
	X	-	-	X	-	X	-
	X	-	-	X	X	X	X
	X	-	-	X	-	X	-
	X	-	-	X	X	X	X

Important Notes

REINTJES Marine Gearboxes

Warranty

The marine gearboxes are subject to the standard REINTJES warranty conditions. Modifications of the gearbox are only permissible in consultation with REINTJES.

Torsional Responsibility

The torsional couplings are selected according to engine torque. In the event that different couplings are required as a result of the torsional vibration calculation, the costs for this change will be for the purchaser's account. Torsional vibration analysis can be made by the engine builders, independent consultants etc. The responsibility for ensuring torsional compatibility of the propulsion system rests with the assembler of the equipment. REINTJES cannot be held liable for damages due to inadmissible high alternating moments on the units supplied by us. These will disengage us from any warranty agreement.

Ratings

Ratings are for diesel engines only, at the rated speeds. The models, ratings, texts, and data contained in this publication are subject to change without prior notice. REINTJES considers standard rotation engines to be counterclockwise (ccw) in rotation, when viewed onto the flywheel end. Please advise REINTJES of engine rotation prior to gearbox selection.

Safety Information

The majority of accidents which occur during operation, maintenance, and repair are caused by failure to observe basic safety rules and accident-prevention precautions. Accidents can often be avoided by correct assessment of potentially hazardous situations. The operating personnel must, at all times, be alert to potential hazards. Furthermore, they must be fully trained, skilled operators provided with the necessary tools and equipment required to perform these functions correctly. Supplementary to the operating manual, all generally valid legal and other binding regulations for accident prevention and pollution control have to be observed and adhered to.

Classification

Classification ratings are available on request.

Options

Information regarding options such as trolling propulsion system, PTO, etc. are available on separate product sheets.

Marine Duty Profiles

C

Continuous Duty

Typical applications: commercial vessels

Engine speed and power: continuous operation with little or no variations

Average engine operating hours: unlimited

Typical hull forms: displacement

M

Medium Duty

Typical applications: private, charter, commercial craft, naval and governmental ships

Engine speed and power: intermittent operation with some variations

Average engine operating hours: 4000 hours/year

Typical hull forms: planing, semi-planing, displacement, catamaran

L

Light Duty

Typical applications: private, charter, sport and pleasure craft, naval and governmental ships

Engine speed and power: intermittent operation with large variations

Average engine operating hours: 2500 hours/year

Typical hull forms: planing, semi-planing, displacement

P

Pleasure Duty

Typical applications: private, noncommercial,

noncharter, sport and leisure activities

Engine speed and power: intermittent operation with very large variations

Average engine operating hours: 500 hours/year

Typical hull forms: planing, semi-planing

Continuous Duty

Reduction ratios: bold = standard,
italics and additional ratios on request

				kW/rpm
WAF 164L				
3,964	**4,560**	**5,043**		0,20
5,950				0,16
WAF 164				
3,964	**4,560**	**5,043**		0,22
5,950				0,21
WAF 244L				
2,037	**2,538**	**2,957**		0,25
3,522				0,23
3,952				0,21
WAF 244				
2,037	**2,538**			0,29
2,957				0,27
3,478	**3,522**			0,24
3,952				0,23
WAF 264L				
3,519	**4,083**	**4,500**	**5,050**	0,25
5,476				0,24
5,800				0,22
WAF 264				
3,519	**4,083**	**4,500**		0,29
5,050				0,27
5,476				0,26
5,800				0,24
WAF 274L				
6,400				0,26
6,115	**7,043**			0,25
7,409				0,24
WAF 274				
6,115	**6,400**			0,29
7,043				0,27
7,409				0,25

kg	kW	(BHP)	kW	(BHP)	kW	(BHP)
525	1600 rpm		1800 rpm		2100 rpm *	
	320	(429)	360	(483)	420	(563)
	256	(343)	288	(386)	336	(451)
525	1600 rpm		1800 rpm		2100 rpm *	
	352	(472)	396	(531)	462	(620)
	336	(451)	378	(507)	441	(591)
455	1600 rpm		1800 rpm		2100 rpm *	
	400	(536)	450	(603)	525	(704)
	368	(493)	414	(555)	483	(648)
	336	(451)	378	(507)	441	(591)
455	1600 rpm		1800 rpm		2100 rpm *	
	464	(622)	522	(700)	609	(817)
	432	(579)	486	(652)	567	(760)
	384	(515)	432	(579)	504	(676)
	368	(493)	414	(555)	483	(648)
700	1600 rpm		1800 rpm		2100 rpm *	
	400	(536)	450	(603)	525	(704)
	384	(515)	432	(579)	504	(676)
	352	(472)	396	(531)	462	(620)
700	1600 rpm		1800 rpm		2100 rpm *	
	464	(622)	522	(700)	609	(817)
	432	(579)	486	(652)	567	(760)
	416	(558)	468	(628)	546	(732)
	384	(515)	432	(579)	504	(676)
725	1600 rpm		1800 rpm		2100 rpm *	
	416	(558)	468	(628)	546	(732)
	400	(536)	450	(603)	525	(704)
	384	(515)	432	(579)	504	(676)
725	1600 rpm		1800 rpm		2100 rpm *	
	464	(622)	522	(700)	609	(817)
	432	(579)	486	(652)	567	(760)
	400	(536)	450	(603)	525	(704)

* max. input speed

Continuous Duty

Reduction ratios: bold = standard,
italics and additional ratios on request

					kW/rpm
WAF 344L					
1,972	**2,452**	**2,963**			0,33
3,571					0,29
4,053					0,28
WAF 344					
1,972	**2,452**	**2,963**			0,36
3,280	**3,571**				0,33
4,053					0,31
WAF 364L					
3,485	**3,933**	**4,481**	**4,920**	**5,435**	0,33
6,048					0,30
WAF 364					
3,485	**3,933**	**4,481**	**4,920**	**5,435**	0,36
6,048					0,34
WAF 374L					
6,120	**6,417**	**7,091**			0,32
7,476					0,29
WAF 374					
6,120	**6,417**	**6,739**	**7,091**		0,36
7,476					0,33
WAF 444L					
2,962	**3,522**				0,40
3,952					0,35
WAF 444					
2,962					0,44
3,522					0,42
3,952					0,40
WAF 464L					
4,000	**4,577**	**5,042**	**5,591**	**5,905**	0,40
WAF 464					
4,000	**4,577**	**5,042**	**5,591**		0,46
5,905					0,45

kg	kW	(BHP)	kW	(BHP)	kW	(BHP)
730	1600 rpm		1800 rpm		2100 rpm *	
	528	(708)	594	(797)	693	(929)
	464	(622)	522	(700)	609	(817)
	448	(601)	504	(676)	588	(789)
730	1600 rpm		1800 rpm		2100 rpm *	
	576	(772)	648	(869)	756	(1014)
	528	(708)	594	(797)	693	(929)
	496	(665)	558	(748)	651	(873)
810	1600 rpm		1800 rpm		2100 rpm *	
	528	(708)	594	(797)	693	(929)
	480	(644)	540	(724)	630	(845)
810	1600 rpm		1800 rpm		2100 rpm *	
	576	(772)	648	(869)	756	(1014)
	544	(730)	612	(821)	714	(957)
1200	1600 rpm		1800 rpm		2100 rpm *	
	512	(687)	576	(772)	672	(901)
	464	(622)	522	(700)	609	(817)
1200	1600 rpm		1800 rpm		2100 rpm *	
	576	(772)	648	(869)	756	(1014)
	528	(708)	594	(797)	693	(929)
760	1600 rpm		1800 rpm		2100 rpm *	
	640	(858)	720	(966)	840	(1126)
	560	(751)	630	(845)	735	(986)
760	1600 rpm		1800 rpm		2100 rpm *	
	704	(944)	792	(1062)	924	(1239)
	672	(901)	756	(1014)	882	(1183)
	640	(858)	720	(966)	840	(1126)
940	1600 rpm		1800 rpm		2100 rpm *	
	640	(858)	720	(966)	840	(1126)
940	1600 rpm		1800 rpm		2100 rpm *	
	736	(987)	828	(1110)	966	(1295)
	720	(966)	810	(1086)	945	(1267)

* max. input speed

Continuous Duty

Reduction ratios: bold = standard,
italics and additional ratios on request

					kW/rpm
WAF 474L					
6,120	**6,417**	**7,091**			0,40
7,476					0,36
WAF 474					
6,120	**6,417**				0,46
7,091					0,45
7,476					0,41
WAF 543					
2,542	**2,960**	**3,542**			0,57
3,955					0,55
4,450					0,49
WAF 563L					
4,545	**5,050**	**5,421**			0,57
5,947					0,52
WAF 563					
4,545	**5,050**	**5,421**			0,59
5,947					0,55
WAF 573L					
6,417	**7,091**	**7,474**			0,53
WAF 573					
6,417					0,59
7,091					0,57
7,474					0,56
WAF 665L					
3,536	*4,080*	*4,560*	**5,043**	*5,571*	0,70
5,950					
WAF 665					
3,536	*4,080*	*4,560*	**5,043**	*5,571*	0,77
5,950					
WAF 675L					
6,417	**6,739**	**7,091**	**7,476**		0,70
WAF 675					
6,417	**6,739**	**7,091**	**7,476**		0,77

kg	kW	(BHP)	kW	(BHP)	kW	(BHP)
1830	1600 rpm		1800 rpm		2100 rpm *	
	640	(858)	720	(966)	840	(1126)
	576	(772)	648	(869)	756	(1014)
1830	1600 rpm		1800 rpm		2100 rpm *	
	736	(987)	828	(1110)	966	(1295)
	720	(966)	810	(1086)	945	(1267)
	656	(880)	738	(990)	861	(1155)
1035	1600 rpm		1800 rpm		2100 rpm *	
	912	(1223)	1026	(1376)	1197	(1605)
	880	(1180)	990	(1328)	1155	(1549)
	784	(1051)	882	(1183)	1029	(1380)
1445	1600 rpm		1800 rpm		2100 rpm *	
	912	(1223)	1026	(1376)	1197	(1605)
	832	(1116)	936	(1255)	1092	(1464)
1445	1600 rpm		1800 rpm		2100 rpm *	
	944	(1266)	1062	(1424)	1239	(1661)
	880	(1180)	990	(1328)	1155	(1549)
2360	1200 rpm		1600 rpm		1800 rpm *	
	636	(853)	848	(1137)	954	(1279)
2360	1200 rpm		1600 rpm		1800 rpm *	
	708	(949)	944	(1266)	1062	(1424)
	684	(917)	912	(1223)	1026	(1376)
	672	(901)	896	(1202)	1008	(1352)
1950	1200 rpm		1600 rpm		1800 rpm *	
	840	(1126)	1120	(1502)	1260	(1690)
1950	1200 rpm		1600 rpm		1800 rpm *	
	924	(1239)	1232	(1652)	1386	(1859)
2600	1200 rpm		1600 rpm		1800 rpm *	
	840	(1126)	1120	(1502)	1260	(1690)
2600	1200 rpm		1600 rpm		1800 rpm *	
	924	(1239)	1232	(1652)	1386	(1859)

* max. input speed

Continuous Duty

Reduction ratios: bold = standard,
italics and additional ratios on request

					kW/rpm
WAF 743L					
3,038	**3,333**	**3,550**	**3,952**		0,88
WAF 743					
3,038	**3,333**	**3,550**			0,98
3,952					0,97
WAF 763L					
4,625	**5,136**	**5,429**	**5,750**	**5,913**	0,88
WAF 763					
4,037	**4,625**	**5,136**	**5,429**	**5,750**	0,98
5,913					0,97
WAF 773L					
6,154	**6,440**	**7,087**	**7,454**		0,88
WAF 773					
6,154	**6,440**	**7,087**	**7,454**		0,98
WAF 843L					
3,080	**3,500**				1,25
3,905	**4,318**				1,15
WAF 843					
3,080	**3,435**	**3,500**	**3,905**		1,38
4,087	**4,318**				1,27
WAF 863L					
4,038	**4,458**	**4,955**			1,25
5,500	**5,842**				1,15
WAF 863					
4,038	**4,458**	**4,955**	**5,500**	**5,842**	1,38
WAF 873L					
6,440	**6,750**	**7,087**			1,25
7,454	**7,526**				1,15
WAF 873					
6,440	**6,750**	**7,087**	**7,454**	**7,526**	1,38
WAF 1143					
1,966	*2,429*	*3,037*			1,63
3,500					1,60

kg	kW	(BHP)	kW	(BHP)	kW	(BHP)
1800	1200 rpm		1600 rpm		1800 rpm *	
	1056	(1416)	1408	(1888)	1584	(2124)
1800	1200 rpm		1600 rpm		1800 rpm *	
	1176	(1577)	1568	(2103)	1764	(2366)
	1164	(1561)	1552	(2081)	1746	(2341)
2300	1200 rpm		1600 rpm		1800 rpm *	
	1056	(1416)	1408	(1888)	1584	(2124)
2300	1200 rpm		1600 rpm		1800 rpm *	
	1176	(1577)	1568	(2103)	1764	(2366)
	1164	(1561)	1552	(2081)	1746	(2341)
3200	1200 rpm		1600 rpm		1800 rpm *	
	1056	(1416)	1408	(1888)	1584	(2124)
3200	1200 rpm		1600 rpm		1800 rpm *	
	1176	(1577)	1568	(2103)	1764	(2366)
2300	1200 rpm		1600 rpm		1800 rpm *	
	1500	(2012)	2000	(2682)	2250	(3017)
	1380	(1851)	1840	(2467)	2070	(2776)
2300	1200 rpm		1600 rpm		1800 rpm *	
	1656	(2221)	2208	(2961)	2484	(3331)
	1524	(2044)	2032	(2725)	2286	(3066)
3100	1200 rpm		1600 rpm		1800 rpm *	
	1500	(2012)	2000	(2682)	2250	(3017)
	1380	(1851)	1840	(2467)	2070	(2776)
3100	1200 rpm		1600 rpm		1800 rpm *	
	1656	(2221)	2208	(2961)	2484	(3331)
4100	1200 rpm		1600 rpm		1800 rpm *	
	1500	(2012)	2000	(2682)	2250	(3017)
	1380	(1851)	1840	(2467)	2070	(2776)
4100	1200 rpm		1600 rpm		1800 rpm *	
	1656	(2221)	2208	(2961)	2484	(3331)
2750	1200 rpm		1600 rpm		1800 rpm *	
	1956	(2623)	2608	(3497)	2934	(3934)
	1920	(2575)	2560	(3433)	2880	(3862)

* max. input speed

Continuous Duty

Reduction ratios: bold = standard,
italics and additional ratios on request

					kW/rpm
WAF 1143					
3,909					1,48
WAF 1163					
4,296	*4,500*	*4,720*	*4,958*		1,63
5,500					1,53
5,810					1,45
WAF 1173					
6,696					1,63
6,850	*7,045*	*7,429*			1,50
8,778					1,25
WAF 1543					
2,032	*2,467*	*3,038*			2,04
3,522	*3,857*				1,90
WAF 1563					
3,903	*4,429*	*4,846*			2,04
5,375	*5,954*	*6,286*			1,80
WAF 1943					
2,059	*2,467*	*2,962*	*3,522*	*3,952*	2,20
4,087					
WAF 1963					
4,467	*4,857*	*5,560*	*5,952*		2,20
6,130	*6,300*	*6,409*			2,10
WAF 1973					
8,316					1,73

kg	kW	(BHP)	kW	(BHP)	kW	(BHP)
2750	1200 rpm		1600 rpm		1800 rpm *	
	1776	(2382)	2368	(3175)	2664	(3572)
3600	1200 rpm		1600 rpm		1800 rpm *	
	1956	(2623)	2608	(3497)	2934	(3934)
	1836	(2462)	2448	(3283)	2754	(3693)
	1740	(2333)	2320	(3111)	2610	(3500)
5000	1200 rpm		1600 rpm		1800 rpm *	
	1956	(2623)	2608	(3497)	2934	(3934)
	1800	(2414)	2400	(3218)	2700	(3621)
	1500	(2012)	2000	(2682)	2250	(3017)
3400	1200 rpm		1300 rpm		1600 rpm *	
	2448	(3283)	2652	(3556)	3264	(4377)
	2280	(3057)	2470	(3312)	3040	(4077)
4460	1200 rpm		1300 rpm		1600 rpm *	
	2448	(3283)	2652	(3556)	3264	(4377)
	2160	(2897)	2340	(3138)	2880	(3862)
4460	1200 rpm		1300 rpm		1600 rpm *	
	2640	(3540)	2860	(3835)	3520	(4720)
5540	1200 rpm		1300 rpm		1600 rpm *	
	2640	(3540)	2860	(3835)	3520	(4720)
	2520	(3379)	2730	(3661)	3360	(4506)
8500	1200 rpm		1300 rpm		1600 rpm *	
	2072	(2779)	2245	(3011)	2763	(3705)

* max. input speed

Continuous Duty

Reduction ratios: bold = standard,
italics and additional ratios on request

		kW/rpm
WAF 2346		
2,077	*4,454*	2,45
WAF 2365		
5,074	*6,455*	2,45
WAF 2355		
3,536	*5,762*	2,45
WAF 2375		
5,958	*7,454*	2,45
WAF 3445		
2,053	*4,524*	3,25
WAF 3455		
4,074		3,25
5,954		3,16
WAF 3465		
5,077		3,25
6,954		2,97
WAF 3475		
6,087	*7,524*	3,25
WAF 4545		
1,591	*4,429*	3,80
WAF 4555		
3,960	*5,773*	3,80
WAF 4566		
4,955	*6,818*	3,80
WAF 4575		
6,120	*7,476*	3,80
WAF 5645		
1,973	*4,550*	5,00
WAF 5655		
4,042		5,00
5,810		4,86
WAF 5666		
5,044		5,00

kg	kW	(BHP)	kW	(BHP)	kW	(BHP)
6000	750 rpm		1000 rpm		1100 rpm *	
	1838	(2464)	2450	(3285)	2695	(3614)
8000	750 rpm		1000 rpm		1100 rpm *	
	1838	(2464)	2450	(3285)	2695	(3614)
7000	750 rpm		1000 rpm		1100 rpm *	
	1838	(2464)	2450	(3285)	2695	(3614)
10000	750 rpm		1000 rpm		1100 rpm *	
	1838	(2464)	2450	(3285)	2695	(3614)
7100	600 rpm		900 rpm		1200 rpm *	
	1950	(2615)	2925	(3922)	3900	(5230)
8500	600 rpm		900 rpm		1200 rpm *	
	1950	(2615)	2925	(3922)	3900	(5230)
	1894	(2539)	2840	(3809)	3787	(5079)
10400	600 rpm		900 rpm		1200 rpm *	
	1950	(2615)	2925	(3922)	3900	(5230)
	1779	(2386)	2668	(3578)	3558	(4771)
11500	600 rpm		900 rpm		1200 rpm *	
	1950	(2615)	2925	(3922)	3900	(5230)
8900	600 rpm		900 rpm		1150 rpm *	
	2280	(3057)	3420	(4586)	4370	(5860)
10500	600 rpm		900 rpm		1150 rpm *	
	2280	(3057)	3420	(4586)	4370	(5860)
12600	600 rpm		900 rpm		1150 rpm *	
	2280	(3057)	3420	(4586)	4370	(5860)
14100	600 rpm		900 rpm		1150 rpm *	
	2280	(3057)	3420	(4586)	4370	(5860)
11600	600 rpm		900 rpm		1100 rpm *	
	3000	(4023)	4500	(6034)	5500	(7376)
13200	600 rpm		900 rpm		1100 rpm *	
	3000	(4023)	4500	(6034)	5500	(7376)
	2916	(3910)	4374	(5866)	5346	(7169)
14800	600 rpm		900 rpm		1100 rpm *	
	3000	(4023)	4500	(6034)	5500	(7376)

* max. input speed

Continuous Duty

Reduction ratios: bold = standard,
italics and additional ratios on request

		kW/rpm
WAF 5666		
6,857		4,79
WAF 5675		
6,125	*7,550*	5,00
WAF 6745		
2,028		6,00
4,450		5,97
WAF 6755		
4,042		6,00
5,762		5,91
WAF 6766		
4,960		6,00
6,450		5,95
WAF 7740		
2,929	*4,409*	7,87
WAF 7750		
3,107	*5,304*	7,87
WAF 7760		
5,136	*6,476*	7,87

kg	kW	(BHP)	kW	(BHP)	kW	(BHP)
14800	600 rpm		900 rpm		1100 rpm *	
	2875	(3855)	4312	(5782)	5270	(7067)
18000	600 rpm		900 rpm		1100 rpm *	
	3000	(4023)	4500	(6034)	5500	(7376)
15000	600 rpm		900 rpm		950 rpm *	
	3600	(4828)	5400	(7241)	5700	(7644)
	3582	(4803)	5373	(7205)	5672	(7605)
17000	600 rpm		900 rpm		950 rpm *	
	3600	(4828)	5400	(7241)	5700	(7644)
	3546	(4755)	5319	(7133)	5614	(7529)
18000	600 rpm		900 rpm		950 rpm *	
	3600	(4828)	5400	(7241)	5700	(7644)
	3570	(4787)	5355	(7181)	5652	(7580)
17000	600 rpm		750 rpm		900 rpm *	
	4722	(6332)	5902	(7915)	7083	(9498)
18000	600 rpm		750 rpm		900 rpm *	
	4722	(6332)	5902	(7915)	7083	(9498)
25000	600 rpm		750 rpm		900 rpm *	
	4722	(6332)	5902	(7915)	7083	(9498)

* max. input speed

Continuous Duty

Range of reduction ratios,
italics and additional ratios on request

Reduction ratio	kW/rpm	rpm	kW	(BHP)
WGF 563				
3,965	0,89	900	796	(1068)
11,674	0,30	1600	482	(646)
WGF 665				
4,042	1,06	900	955	(1281)
11,334	0,38	1600	605	(811)
WGF 763				
3,093	1,34	600	805	(1080)
11,304	0,44	1600	702	(942)
WGF 863				
4,080	1,98	800	1581	(2120)
11,052	0,73	1600	1166	(1564)
WGF 1563				
3,503	2,50	600	1502	(2015)
10,123	1,06	1600	1694	(2272)
WGF 1963				
3,501	2,50	600	1502	(2015)
10,119	1,29	1600	2070	(2776)
WGF 3455				
4,069	4,38	600	2627	(3523)
8,713	2,22	1600	3554	(4765)
WGF 4566				
4,154	4,20	500	2100	(2816)
9,205	2,65	1000	2654	(3559)

rpm	kW	(BHP)	max. rpm	max. kW	(BHP)
1035 kg					
1100	974	(1305)	1400	1239	(1661)
2000	602	(807)	2450	737	(989)
2360 kg					
1100	1167	(1565)	1300	1379	(1850)
2000	756	(1014)	2450	926	(1242)
2800 kg					
800	1074	(1440)	900	1208	(1620)
2000	878	(1177)	2450	1076	(1442)
3720 kg					
1000	1976	(2650)	1250	2470	(3312)
2000	1458	(1955)	2450	1786	(2395)
5960 kg					
800	2003	(2686)	950	2379	(3190)
2000	2118	(2840)	2400	2542	(3408)
7400 kg					
800	2003	(2686)	950	2379	(3190)
2000	2588	(3471)	2400	3106	(4165)
10000 kg					
800	3503	(4698)	900	3941	(5285)
1800	3998	(5361)	1950	4331	(5808)
15000 kg					
600	2520	(3379)	650	2730	(3661)
1200	3185	(4271)	1400	3716	(4983)

* max. input speed

Continuous Duty

Reduction ratios: bold = standard,
italics and additional ratios on request

					kW/rpm
AF 264					
3,519	*4,083*	*4,500*			0,29
5,050					0,27
5,476					0,26
5,800					0,24
AF 344					
1,972	*2,452*	*2,963*			0,36
3,280	*3,571*				0,33
4,053					0,31
AF 364					
3,485	*3,933*	*4,481*	*4,920*	*5,435*	0,36
6,048					0,34
AF 665					
3,536	*4,080*	*4,560*	*5,043*	*5,571*	0,77
5,950					
AF 743					
3,038	*3,333*	*3,550*			1,00
3,952					0,97
AF 763					
4,037	*4,625*	*5,136*	*5,429*	*5,750*	1,00
5,913					0,97
AF 843					
3,080	*3,435*	*3,500*			1,45
3,905					1,38
4,087	*4,318*				1,27
AF 863					
4,038	*4,458*	*4,955*			1,45
5,500	*5,842*				1,38
AF 873					
6,440	*6,750*	*7,087*			1,45
7,454	*7,526*				1,38
AF 1143					
1,966	*2,429*	*3,037*			1,70

kg	kW	(BHP)	kW	(BHP)	kW	(BHP)
670	1600 rpm		1800 rpm		2100 rpm *	
	464	(622)	522	(700)	609	(817)
	432	(579)	486	(652)	567	(760)
	416	(558)	468	(628)	546	(732)
	384	(515)	432	(579)	504	(676)
700	1600 rpm		1800 rpm		2100 rpm *	
	576	(772)	648	(869)	756	(1014)
	528	(708)	594	(797)	693	(929)
	496	(665)	558	(748)	651	(873)
770	1600 rpm		1800 rpm		2100 rpm *	
	576	(772)	648	(869)	756	(1014)
	544	(730)	612	(821)	714	(957)
1700	1200 rpm		1600 rpm		1800 rpm *	
	924	(1239)	1232	(1652)	1386	(1859)
1600	1200 rpm		1600 rpm		1800 rpm *	
	1200	(1609)	1600	(2146)	1800	(2414)
	1164	(1561)	1552	(2081)	1746	(2341)
2100	1200 rpm		1600 rpm		1800 rpm *	
	1200	(1609)	1600	(2146)	1800	(2414)
	1164	(1561)	1552	(2081)	1746	(2341)
2200	1200 rpm		1600 rpm		1800 rpm *	
	1740	(2333)	2320	(3111)	2610	(3500)
	1656	(2221)	2208	(2961)	2484	(3331)
	1524	(2044)	2032	(2725)	2286	(3066)
2900	1200 rpm		1600 rpm		1800 rpm *	
	1740	(2333)	2320	(3111)	2610	(3500)
	1656	(2221)	2208	(2961)	2484	(3331)
3800	1200 rpm		1600 rpm		1800 rpm *	
	1740	(2333)	2320	(3111)	2610	(3500)
	1656	(2221)	2208	(2961)	2484	(3331)
2200	1200 rpm		1600 rpm		1800 rpm *	
	2040	(2736)	2720	(3648)	3060	(4103)

* max. input speed

Continuous Duty

Reduction ratios: bold = standard,
italics and additional ratios on request

			kW/rpm
AF 1143			
3,500			1,60
3,909			1,48
AF 1163			
4,500	*4,720*	*4,958*	1,70
5,500			1,53
5,810			1,45
AF 1173			
6,696			1,63
6,850	*7,045*	*7,429*	1,50
AF 1543			
2,032	*2,467*	*3,038*	2,10
3,522	*3,857*		1,90
AF 1563			
4,429	*4,846*		2,10
5,375	*5,954*		1,80

kg	kW	(BHP)	kW	(BHP)	kW	(BHP)
2200	1200 rpm		1600 rpm		1800 rpm *	
	1920	(2575)	2560	(3433)	2880	(3862)
	1776	(2382)	2368	(3175)	2664	(3572)
3150	1200 rpm		1600 rpm		1800 rpm *	
	2040	(2736)	2720	(3648)	3060	(4103)
	1836	(2462)	2448	(3283)	2754	(3693)
	1740	(2333)	2320	(3111)	2610	(3500)
3300	1200 rpm		1600 rpm		1800 rpm *	
	1956	(2623)	2608	(3497)	2934	(3934)
	1800	(2414)	2400	(3218)	2700	(3621)
3200	1200 rpm		1300 rpm		1600 rpm *	
	2520	(3379)	2730	(3661)	3360	(4506)
	2280	(3057)	2470	(3312)	3040	(4077)
4300	1200 rpm		1300 rpm		1600 rpm *	
	2520	(3379)	2730	(3661)	3360	(4506)
	2160	(2897)	2340	(3138)	2880	(3862)

* max. input speed

Continuous Duty

Reduction ratios: bold = standard, italics and additional ratios on request	kW/rpm
AF 2365	
5,074	3,45
5,560	3,19
5,952	2,94
6,455	2,81
AF 2375	
5,958	3,32
6,440	3,20
6,952	2,94
7,454	2,81

kg	kW	(BHP)	kW	(BHP)	kW	(BHP)
7800	750 rpm		1000 rpm		1100 rpm *	
	2588	(3470)	3450	(4626)	3795	(5089)
	2392	(3208)	3190	(4278)	3509	(4706)
	2205	(2957)	2940	(3943)	3234	(4337)
	2108	(2826)	2810	(3768)	3091	(4145)
8500	750 rpm		1000 rpm		1100 rpm *	
	2490	(3339)	3320	(4452)	3652	(4897)
	2400	(3218)	3200	(4291)	3520	(4720)
	2205	(2957)	2940	(3943)	3234	(4337)
	2108	(2826)	2810	(3768)	3091	(4145)

* max. input speed

Continuous Duty

Reduction ratios: bold = standard,
italics and additional ratios on request

					kW/rpm
LAF 543					
2,542	**2,960**	**3,542**			0,57
3,955					0,55
4,450					0,49
LAF 563L					
4,545	**5,050**	**5,421**			0,57
5,947					0,53
LAF 563					
4,545	**5,050**	**5,421**			0,59
5,947					0,55
LAF 573L					
6,417	**7,091**	**7,474**			0,53
LAF 573					
6,417	**7,091**				0,57
7,474					0,56
LAF 665L					
3,536	*4,080*	*4,560*	**5,043**	*5,571*	0,70
5,950					
LAF 665					
3,536	*4,080*	*4,560*	**5,043**	*5,571*	0,77
5,950					
LAF 675L					
6,417	**6,739**	**7,091**	**7,476**		0,70
LAF 675					
6,417	**6,739**	**7,091**	**7,476**		0,77
LAF 743L					
3,038	**3,333**	**3,550**	**3,952**		0,88
LAF 743					
3,038	**3,333**	**3,550**			1,00
3,952					0,97
LAF 763L					
4,625	**5,136**	**5,429**	**5,750**	**5,913**	0,88

kg	kW	(BHP)	kW	(BHP)	kW	(BHP)
925	1600 rpm		1800 rpm		2100 rpm *	
	912	(1223)	1026	(1376)	1197	(1605)
	880	(1180)	990	(1328)	1155	(1549)
	784	(1051)	882	(1183)	1029	(1380)
1325	1600 rpm		1800 rpm		2100 rpm *	
	912	(1223)	1026	(1376)	1197	(1605)
	848	(1137)	954	(1279)	1113	(1493)
1325	1600 rpm		1800 rpm		2100 rpm *	
	944	(1266)	1062	(1424)	1239	(1661)
	880	(1180)	990	(1328)	1155	(1549)
2190	1200 rpm		1600 rpm		1800 rpm *	
	636	(853)	848	(1137)	954	(1279)
2190	1200 rpm		1600 rpm		1800 rpm *	
	684	(917)	912	(1223)	1026	(1376)
	672	(901)	896	(1202)	1008	(1352)
1800	1200 rpm		1600 rpm		1800 rpm *	
	840	(1126)	1120	(1502)	1260	(1690)
1800	1200 rpm		1600 rpm		1800 rpm *	
	924	(1239)	1232	(1652)	1386	(1859)
2450	1200 rpm		1600 rpm		1800 rpm *	
	840	(1126)	1120	(1502)	1260	(1690)
2450	1200 rpm		1600 rpm		1800 rpm *	
	924	(1239)	1232	(1652)	1386	(1859)
1600	1200 rpm		1600 rpm		1800 rpm *	
	1056	(1416)	1408	(1888)	1584	(2124)
1600	1200 rpm		1600 rpm		1800 rpm *	
	1200	(1609)	1600	(2146)	1800	(2414)
	1164	(1561)	1552	(2081)	1746	(2341)
2100	1200 rpm		1600 rpm		1800 rpm *	
	1056	(1416)	1408	(1888)	1584	(2124)

* max. input speed

Continuous Duty

Reduction ratios: bold = standard,
italics and additional ratios on request

					kW/rpm
LAF 763					
4,037	**4,625**	**5,136**	**5,429**	**5,750**	1,00
5,913					0,97
LAF 773L					
6,154	**6,440**	**7,087**	**7,454**		0,88
LAF 773					
6,154	**6,440**	**7,087**	**7,454**		1,00
LAF 843L					
3,080	**3,500**				1,25
3,905	**4,318**				1,15
LAF 843					
3,080	**3,435**	**3,500**			1,45
3,905					1,38
4,087	**4,318**				1,27
LAF 863L					
4,038	**4,458**	**4,955**			1,25
5,500	**5,842**				1,15
LAF 863					
4,038	**4,458**	**4,955**			1,45
5,500	**5,842**				1,38
LAF 873L					
6,440	**6,750**	**7,087**			1,25
7,454	**7,526**				1,15
LAF 873					
6,440	**6,750**	**7,087**			1,45
7,454	**7,526**				1,38
LAF 1143					
1,966	*2,429*	*3,037*			1,70
3,500					1,60
3,909					1,48
LAF 1163					
4,296	*4,500*	*4,958*			1,70
5,500					1,53

kg	kW	(BHP)	kW	(BHP)	kW	(BHP)
2100	1200 rpm		1600 rpm		1800 rpm *	
	1200	(1609)	1600	(2146)	1800	(2414)
	1164	(1561)	1552	(2081)	1746	(2341)
3000	1200 rpm		1600 rpm		1800 rpm *	
	1056	(1416)	1408	(1888)	1584	(2124)
3000	1200 rpm		1600 rpm		1800 rpm *	
	1200	(1609)	1600	(2146)	1800	(2414)
2640	1200 rpm		1600 rpm		1800 rpm *	
	1500	(2012)	2000	(2682)	2250	(3017)
	1380	(1851)	1840	(2467)	2070	(2776)
2640	1200 rpm		1600 rpm		1800 rpm *	
	1740	(2333)	2320	(3111)	2610	(3500)
	1656	(2221)	2208	(2961)	2484	(3331)
	1524	(2044)	2032	(2725)	2286	(3066)
2850	1200 rpm		1600 rpm		1800 rpm *	
	1500	(2012)	2000	(2682)	2250	(3017)
	1380	(1851)	1840	(2467)	2070	(2776)
2850	1200 rpm		1600 rpm		1800 rpm *	
	1740	(2333)	2320	(3111)	2610	(3500)
	1656	(2221)	2208	(2961)	2484	(3331)
3850	1200 rpm		1600 rpm		1800 rpm *	
	1500	(2012)	2000	(2682)	2250	(3017)
	1380	(1851)	1840	(2467)	2070	(2776)
3850	1200 rpm		1600 rpm		1800 rpm *	
	1740	(2333)	2320	(3111)	2610	(3500)
	1656	(2221)	2208	(2961)	2484	(3331)
2450	1200 rpm		1600 rpm		1800 rpm *	
	2040	(2736)	2720	(3648)	3060	(4103)
	1920	(2575)	2560	(3433)	2880	(3862)
	1776	(2382)	2368	(3175)	2664	(3572)
3300	1200 rpm		1600 rpm		1800 rpm *	
	2040	(2736)	2720	(3648)	3060	(4103)
	1836	(2462)	2448	(3283)	2754	(3693)

* max. input speed

Continuous Duty

Reduction ratios: bold = standard, italics and additional ratios on request			kW/rpm
LAF 1163			
5,810			1,45
LAF 1173			
6,696			1,63
7,045	*7,429*		1,50
8,778			1,25
LAF 1543			
2,032	*2,467*	*3,038*	2,10
3,522	*3,857*		1,90
LAF 1563			
3,903	*4,429*	*4,846*	2,10
5,375	*5,954*	*6,286*	1,80
LAF 1943			
2,059	*2,467*	*2,962*	2,45
3,522	*3,952*	*4,087*	2,20
LAF 1963			
4,467			2,45
4,857	*5,560*	*5,952*	2,20
6,130	*6,300*	*6,409*	2,10
LAF 1973			
8,316			1,73

kg	kW	(BHP)	kW	(BHP)	kW	(BHP)
3300	1200 rpm		1600 rpm		1800 rpm *	
	1740	(2333)	2320	(3111)	2610	(3500)
4600	1200 rpm		1600 rpm		1800 rpm *	
	1956	(2623)	2608	(3497)	2934	(3934)
	1800	(2414)	2400	(3218)	2700	(3621)
	1500	(2012)	2000	(2682)	2250	(3017)
3000	1200 rpm		1500 rpm		1600 rpm *	
	2520	(3379)	3150	(4224)	3360	(4506)
	2280	(3057)	2850	(3822)	3040	(4077)
4000	1200 rpm		1500 rpm		1600 rpm *	
	2520	(3379)	3150	(4224)	3360	(4506)
	2160	(2897)	2700	(3621)	2880	(3862)
4060	1200 rpm		1500 rpm		1600 rpm *	
	2940	(3943)	3675	(4928)	3920	(5257)
	2640	(3540)	3300	(4425)	3520	(4720)
4940	1200 rpm		1500 rpm		1600 rpm *	
	2940	(3943)	3675	(4928)	3920	(5257)
	2640	(3540)	3300	(4425)	3520	(4720)
	2520	(3379)	3150	(4224)	3360	(4506)
7580	1200 rpm		1300 rpm		1600 rpm *	
	2072	(2779)	2245	(3011)	2763	(3705)

* max. input speed

Continuous Duty

Reduction ratios: bold = standard, italics and additional ratios on request	kW/rpm
LAF 2346	
2,077	3,40
4,454	2,80
LAF 2365	
5,074	3,40
6,455	2,81
LAF 2355	
3,536	3,40
5,762	2,67
LAF 2375	
5,958	3,32
7,454	2,81
LAF 3445	
2,053	4,35
4,524	3,42
LAF 3465	
5,077	4,35
6,954	2,97
LAF 3455	
4,074	4,35
5,954	3,16
LAF 3475	
6,087	4,35
7,524	3,60
LAF 4545	
1,591	5,50
4,429	4,02
LAF 4555	
3,960	5,22
5,773	3,82
LAF 4566	
6,818	3,82

kg	kW	(BHP)	kW	(BHP)	kW	(BHP)
5300	750 rpm		1000 rpm		1100 rpm *	
	2550	(3420)	3400	(4559)	3740	(5015)
	2100	(2816)	2800	(3755)	3080	(4130)
7200	750 rpm		1000 rpm		1100 rpm *	
	2550	(3420)	3400	(4559)	3740	(5015)
	2108	(2826)	2810	(3768)	3091	(4145)
6300	750 rpm		1000 rpm		1100 rpm *	
	2550	(3420)	3400	(4559)	3740	(5015)
	2002	(2685)	2670	(3580)	2937	(3939)
9200	750 rpm		1000 rpm		1100 rpm *	
	2490	(3339)	3320	(4452)	3652	(4897)
	2108	(2826)	2810	(3768)	3091	(4145)
6400	600 rpm		900 rpm		1200 rpm *	
	2610	(3500)	3915	(5250)	5220	(7000)
	2052	(2752)	3078	(4128)	4104	(5503)
9700	600 rpm		900 rpm		1200 rpm *	
	2610	(3500)	3915	(5250)	5220	(7000)
	1779	(2386)	2668	(3578)	3558	(4771)
7800	600 rpm		900 rpm		1200 rpm *	
	2610	(3500)	3915	(5250)	5220	(7000)
	1894	(2539)	2840	(3809)	3787	(5079)
10800	600 rpm		900 rpm		1200 rpm *	
	2610	(3500)	3915	(5250)	5220	(7000)
	2159	(2895)	3238	(4342)	4318	(5790)
8000	600 rpm		900 rpm		1200 rpm *	
	3300	(4425)	4950	(6638)	6600	(8851)
	2412	(3234)	3618	(4852)	4824	(6469)
9500	600 rpm		900 rpm		1200 rpm *	
	3132	(4200)	4698	(6300)	6264	(8400)
	2292	(3074)	3438	(4610)	4584	(6147)
11100	600 rpm		900 rpm		1200 rpm *	
	2292	(3074)	3438	(4610)	4584	(6147)

* max. input speed

Continuous Duty

Reduction ratios: bold = standard, italics and additional ratios on request	kW/rpm
LAF 4575	
6,120	4,74
7,476	3,99
LAF 5645	
1,973	7,00
4,550	5,09
LAF 5655	
4,042	6,57
5,810	4,86
LAF 5666	
5,044	6,36
6,857	4,79
LAF 5675	
6,125	6,10
7,550	5,08
LAF 6745	
2,028	8,40
4,450	5,97
LAF 6755	
4,042	7,93
5,762	5,91
LAF 6766	
4,960	7,44
6,450	5,95
LAF 7740	
2,929	11,00
4,409	8,56
LAF 7750	
3,107	10,07
5,304	7,91
LAF 7760	
5,136	9,86
6,476	7,98

kg	kW	(BHP)	kW	(BHP)	kW	(BHP)
13100	600 rpm		900 rpm		1200 rpm *	
	2844	(3814)	4266	(5721)	5688	(7628)
	2394	(3210)	3591	(4816)	4788	(6421)
10600	600 rpm		900 rpm		1200 rpm *	
	4200	(5632)	6300	(8448)	8400	(11264)
	3054	(4095)	4581	(6143)	6108	(8191)
12200	600 rpm		900 rpm		1200 rpm *	
	3942	(5286)	5913	(7929)	7884	(10572)
	2916	(3910)	4374	(5866)	5832	(7821)
13800	600 rpm		900 rpm		1200 rpm *	
	3816	(5117)	5724	(7676)	7632	(10235)
	2875	(3855)	4312	(5782)	5749	(7710)
17000	600 rpm		900 rpm		1200 rpm *	
	3660	(4908)	5490	(7362)	7320	(9816)
	3048	(4087)	4572	(6131)	6096	(8175)
14000	600 rpm		900 rpm		1150 rpm *	
	5040	(6759)	7560	(10138)	9660	(12954)
	3582	(4803)	5373	(7205)	6866	(9207)
16000	600 rpm		900 rpm		1150 rpm *	
	4758	(6380)	7137	(9571)	9120	(12229)
	3546	(4755)	5319	(7133)	6796	(9114)
17000	600 rpm		900 rpm		1150 rpm *	
	4464	(5986)	6696	(8979)	8556	(11474)
	3570	(4787)	5355	(7181)	6842	(9176)
16000	600 rpm		900 rpm		1150 rpm *	
	6600	(8851)	9900	(13276)	12650	(16964)
	5136	(6887)	7704	(10331)	9844	(13201)
17000	600 rpm		900 rpm		1150 rpm *	
	6042	(8102)	9063	(12153)	11580	(15529)
	4746	(6364)	7119	(9547)	9096	(12198)
23500	600 rpm		900 rpm		1150 rpm *	
	5916	(7933)	8874	(11900)	11339	(15206)
	4787	(6419)	7180	(9629)	9175	(12303)

* max. input speed

Continuous Duty

Range of reduction ratios, italics and additional ratios on request		kW/rpm
VLJ 1130	>> standard engine operating up to 5000 hours/y	
1,512		1,85
2,962		1,78
VLJ 1930	>> standard engine operating up to 5000 hours/y	
1,410		2,00
3,368		1,85
VLJ 2230	>> standard engine operating up to 5000 hours/y	
1,513		2,45
2,920		2,30
VLJ 3330		
1,513		3,96
2,920		3,18
VLJ 4431		
1,552		6,20
2,600		4,85
VLJ 6831		
1,405		7,20
VLJ 6841		
2,097		7,20
2,840		7,00
VLJ 7531		
1,541		8,20
2,133		8,00
VLJ 7541		
1,486	*2,067*	9,20

kg	kW	(BHP)	kW	(BHP)	kW	(BHP)
1300	1000 rpm		1200 rpm		1950 rpm *	
	1850	(2481)	2220	(2977)	3608	(4838)
	1780	(2387)	2136	(2864)	3471	(4655)
1150	1000 rpm		1200 rpm		1950 rpm *	
	2000	(2682)	2400	(3218)	3900	(5230)
	1850	(2481)	2220	(2977)	3608	(4838)
1600	1000 rpm		1200 rpm		1950 rpm *	
	2450	(3285)	2940	(3943)	4778	(6407)
	2300	(3084)	2760	(3701)	4485	(6014)
1700	900 rpm		1100 rpm		1200 rpm *	
	3564	(4779)	4356	(5841)	4752	(6372)
	2863	(3839)	3499	(4692)	3817	(5119)
3600	900 rpm		1100 rpm		1200 rpm *	
	5580	(7483)	6820	(9146)	7440	(9977)
	4365	(5853)	5335	(7154)	5820	(7805)
3900	900 rpm		1100 rpm		1200 rpm *	
	6480	(8690)	7920	(10621)	8640	(11586)
4900	900 rpm		1100 rpm		1200 rpm *	
	6480	(8690)	7920	(10621)	8640	(11586)
	6300	(8448)	7700	(10326)	8400	(11264)
4300	900 rpm		1100 rpm		1200 rpm *	
	7380	(9897)	9020	(12096)	9840	(13195)
	7200	(9655)	8800	(11801)	9600	(12874)
4850	900 rpm		1100 rpm		1200 rpm *	
	8280	(11103)	10120	(13571)	11040	(14805)

* max. input speed

Continuous Duty

Range of reduction ratios, italics and additional ratios on request	kW/rpm
VA 2451	
3,179	4,14
5,450	2,44
VA 2741	
1,500	7,40
3,944	3,80
VA 3451	
4,095	5,50
5,273	4,06
VA 3462	
5,286	5,00
5,905	4,45
VA 3541	
1,514	10,10
4,050	5,26
VA 4851	
3,818	8,40
4,809	6,90
VA 4855	
3,542	10,97
5,048	8,11
VA 4945	
1,512	10,14
3,905	7,07
VA 4941	
2,276	10,67
4,053	7,07

kg	kW	(BHP)	kW	(BHP)	kW	(BHP)
5100	750 rpm		900 rpm		1200 rpm *	
	3105	(4164)	3726	(4997)	4968	(6662)
	1830	(2454)	2196	(2945)	2928	(3926)
5500	750 rpm		900 rpm		1200 rpm *	
	5550	(7443)	6660	(8931)	8880	(11908)
	2850	(3822)	3420	(4586)	4560	(6115)
8700	750 rpm		900 rpm		1200 rpm *	
	4125	(5532)	4950	(6638)	6600	(8851)
	3047	(4086)	3657	(4904)	4876	(6538)
10200	750 rpm		900 rpm		1200 rpm *	
	3750	(5029)	4500	(6034)	6000	(8046)
	3338	(4476)	4005	(5371)	5340	(7161)
7600	750 rpm		900 rpm		1200 rpm *	
	7575	(10158)	9090	(12190)	12120	(16253)
	3945	(5290)	4734	(6348)	6312	(8464)
12000	750 rpm		900 rpm		1200 rpm *	
	6300	(8448)	7560	(10138)	10080	(13517)
	5175	(6940)	6210	(8328)	8280	(11103)
12500	750 rpm		900 rpm		1200 rpm *	
	8228	(11033)	9873	(13240)	13164	(17653)
	6082	(8157)	7299	(9788)	9732	(13051)
10800	750 rpm		900 rpm		1200 rpm *	
	7605	(10198)	9126	(12238)	12168	(16317)
	5302	(7111)	6363	(8533)	8484	(11377)
9500	750 rpm		900 rpm		1200 rpm *	
	8002	(10731)	9603	(12878)	12804	(17170)
	5302	(7111)	6363	(8533)	8484	(11377)

* max. input speed

Continuous Duty

Range of reduction ratios, italics and additional ratios on request	kW/rpm
SVA 630B	
2,483	5,70
3,810	4,20
SVA 630A	
4,083	3,20
5,181	2,00
SVA 750B	
3,148	7,70
SVA 800B	
2,031	12,90
3,905	8,00
SVA 800A	
4,550	5,80
SVA 800-6B	
4,875	4,40
5,409	4,00
SVA 800-6A	
5,762	3,00
SVA 850B	
1,973	18,30
3,783	12,00
SVA 850A	
3,917	8,60
4,364	7,90
SVA 850-6B	
4,900	4,90
5,571	4,40
SVA 900B	
2,028	19,00
3,955	12,00
SVA 900A	
4,208	8,60
4,682	7,90

kg	kW	(BHP)	kW	(BHP)	kW	(BHP)
-	600 rpm		750 rpm		1000 rpm *	
	3420	(4586)	4275	(5733)	5700	(7644)
	2520	(3379)	3150	(4224)	4200	(5632)
-	600 rpm		750 rpm		1000 rpm *	
	1920	(2575)	2400	(3218)	3200	(4291)
	1200	(1609)	1500	(2012)	2000	(2682)
12000	600 rpm		750 rpm		1000 rpm *	
	4620	(6195)	5775	(7744)	7700	(10326)
13200	500 rpm		750 rpm		1000 rpm *	
	6450	(8649)	9675	(12974)	12900	(17299)
	4000	(5364)	6000	(8046)	8000	(10728)
13200	500 rpm		750 rpm		1000 rpm *	
	2900	(3889)	4350	(5833)	5800	(7778)
-	500 rpm		750 rpm		1000 rpm *	
	2200	(2950)	3300	(4425)	4400	(5900)
	2000	(2682)	3000	(4023)	4000	(5364)
-	500 rpm		750 rpm		1000 rpm *	
	1500	(2012)	2250	(3017)	3000	(4023)
16000	500 rpm		750 rpm		1000 rpm *	
	9150	(12270)	13725	(18405)	18300	(24540)
	6000	(8046)	9000	(12069)	12000	(16092)
16000	500 rpm		750 rpm		1000 rpm *	
	4300	(5766)	6450	(8649)	8600	(11533)
	3950	(5297)	5925	(7945)	7900	(10594)
-	500 rpm		750 rpm		1000 rpm *	
	2450	(3285)	3675	(4928)	4900	(6571)
	2200	(2950)	3300	(4425)	4400	(5900)
17000	500 rpm		750 rpm		1000 rpm *	
	9500	(12740)	14250	(19109)	19000	(25479)
	6000	(8046)	9000	(12069)	12000	(16092)
17000	500 rpm		750 rpm		1000 rpm *	
	4300	(5766)	6450	(8649)	8600	(11533)
	3950	(5297)	5925	(7945)	7900	(10594)

* max. input speed

Continuous Duty

Range of reduction ratios, italics and additional ratios on request	kW/rpm
SVA 900-6A	
4,826	6,45
5,381	5,90
SVA 950B	
2,594	22,00
3,792	16,00
SVA 950A	
3,920	13,20
4,348	11,60
SVA 950-6B	
4,591	8,80
4,857	8,40
SVA 950-6A	
5,150	6,40
5,762	5,90
SVA 1000B	
1,972	26,50
4,042	16,10
SVA 1000A	
4,500	11,30
4,750	10,90
SVA 1050B	
2,054	27,50
4,136	16,60
SVA 1050A	
4,381	12,50
4,773	11,50
SVA 1050-6B	
5,048	8,80
5,636	8,00
SVA 1050-6A	
5,952	6,20
6,136	6,03

kg	kW	(BHP)	kW	(BHP)	kW	(BHP)
-	500 rpm		750 rpm		1000 rpm *	
	3225	(4325)	4838	(6487)	6450	(8649)
	2950	(3956)	4425	(5934)	5900	(7912)
18800	500 rpm		750 rpm		1000 rpm *	
	11000	(14751)	16500	(22126)	22000	(29502)
	8000	(10728)	12000	(16092)	16000	(21456)
18800	500 rpm		750 rpm		1000 rpm *	
	6600	(8851)	9900	(13276)	13200	(17701)
	5800	(7778)	8700	(11667)	11600	(15556)
-	600 rpm		750 rpm		1000 rpm *	
	5280	(7080)	6600	(8851)	8800	(11801)
	5040	(6759)	6300	(8448)	8400	(11264)
-	600 rpm		750 rpm		1000 rpm *	
	3840	(5149)	4800	(6437)	6400	(8582)
	3540	(4747)	4425	(5934)	5900	(7912)
19500	500 rpm		750 rpm		1000 rpm *	
	13250	(17768)	19875	(26652)	26500	(35536)
	8050	(10795)	12075	(16193)	16100	(21590)
19500	500 rpm		750 rpm		1000 rpm *	
	5650	(7577)	8475	(11365)	11300	(15153)
	5450	(7308)	8175	(10963)	10900	(14617)
21000	500 rpm		750 rpm		1000 rpm *	
	13750	(18439)	20625	(27658)	27500	(36878)
	8300	(11130)	12450	(16695)	16600	(22261)
21000	500 rpm		750 rpm		1000 rpm *	
	6250	(8381)	9375	(12572)	12500	(16762)
	5750	(7711)	8625	(11566)	11500	(15422)
-	500 rpm		750 rpm		1000 rpm *	
	4400	(5900)	6600	(8851)	8800	(11801)
	4000	(5364)	6000	(8046)	8000	(10728)
-	500 rpm		750 rpm		1000 rpm *	
	3100	(4157)	4650	(6236)	6200	(8314)
	3015	(4043)	4522	(6065)	6030	(8086)

* max. input speed

Continuous Duty

Range of reduction ratios, italics and additional ratios on request	kW/rpm
SVA 1120B	
2,025	38,10
4,455	16,60
SVA 1120A	
4,800	12,30
5,304	10,30
SVA 1200B	
2,023	44,00
4,417	24,25
SVA 1200A	
4,864	17,50
5,083	16,90
SVA 1200-6B	
5,348	12,40
5,783	11,50
SVA 1200-6A	
6,091	8,80
6,429	8,40

kg	kW	(BHP)	kW	(BHP)	kW	(BHP)
22500	500 rpm		750 rpm		1000 rpm *	
	19050	(25546)	28575	(38319)	38100	(51092)
	8300	(11130)	12450	(16695)	16600	(22261)
22500	500 rpm		750 rpm		1000 rpm *	
	6150	(8247)	9225	(12371)	12300	(16494)
	5150	(6906)	7725	(10359)	10300	(13812)
31000	500 rpm		750 rpm		1000 rpm *	
	22000	(29502)	33000	(44253)	44000	(59004)
	12126	(16262)	18190	(24392)	24253	(32523)
31000	500 rpm		750 rpm		1000 rpm *	
	8750	(11734)	13125	(17601)	17500	(23468)
	8450	(11331)	12675	(16997)	16900	(22663)
-	500 rpm		750 rpm		1000 rpm *	
	6200	(8314)	9300	(12471)	12400	(16628)
	5750	(7711)	8625	(11566)	11500	(15422)
-	500 rpm		750 rpm		1000 rpm *	
	4400	(5900)	6600	(8851)	8800	(11801)
	4200	(5632)	6300	(8448)	8400	(11264)

* max. input speed

Continuous Duty

Range of reduction ratios, italics and additional ratios on request	kW/rpm
SVAL 850-88B	
1,973	14,50
3,783	9,87
SVAL 850-88A	
3,917	8,50
SVAL 950-66B	
3,423	8,40
4,917	6,95
SVAL 950-66A	
5,150	6,10
5,762	5,50
SVAL 1000-99	
2,484	19,00
4,042	15,20
SVAL 1000-88	
2,484	14,50
4,042	13,62
SVAL 1000-88	
4,500	11,60
4,750	11,10
SVAL 1060-66	
4,476	8,40
5,682	6,40
SVAL 1060-66	
5,913	5,80
6,478	5,40
SVAL 1120-99	
3,033 4,042	19,00
SVAL 1120-99	
4,217	16,40
4,455	15,70
SVAL 1120-88	
3,033	14,50

kg	kW	(BHP)	kW	(BHP)	kW	(BHP)
-	500 rpm		750 rpm		1000 rpm *	
	7250	(9722)	10875	(14583)	14500	(19444)
	4935	(6618)	7402	(9927)	9870	(13236)
-	500 rpm		750 rpm		1000 rpm *	
	4250	(5699)	6375	(8549)	8500	(11398)
-	600 rpm		750 rpm		1000 rpm *	
	5040	(6759)	6300	(8448)	8400	(11264)
	4172	(5595)	5216	(6994)	6954	(9325)
-	600 rpm		750 rpm		1000 rpm *	
	3660	(4908)	4575	(6135)	6100	(8180)
	3300	(4425)	4125	(5532)	5500	(7376)
-	500 rpm		750 rpm		1000 rpm *	
	9500	(12740)	14250	(19109)	19000	(25479)
	7600	(10192)	11400	(15287)	15200	(20383)
-	500 rpm		750 rpm		1000 rpm *	
	7250	(9722)	10875	(14583)	14500	(19444)
	6811	(9134)	10216	(13700)	13622	(18267)
-	500 rpm		750 rpm		1000 rpm *	
	5800	(7778)	8700	(11667)	11600	(15556)
	5550	(7443)	8325	(11164)	11100	(14885)
-	600 rpm		750 rpm		1000 rpm *	
	5040	(6759)	6300	(8448)	8400	(11264)
	3840	(5149)	4800	(6437)	6400	(8582)
-	600 rpm		750 rpm		1000 rpm *	
	3480	(4667)	4350	(5833)	5800	(7778)
	3240	(4345)	4050	(5431)	5400	(7241)
-	500 rpm		750 rpm		1000 rpm *	
	9500	(12740)	14250	(19109)	19000	(25479)
-	500 rpm		750 rpm		1000 rpm *	
	8200	(10996)	12300	(16494)	16400	(21992)
	7850	(10527)	11775	(15790)	15700	(21054)
-	500 rpm		750 rpm		1000 rpm *	
	7250	(9722)	10875	(14583)	14500	(19444)

* max. input speed

Continuous Duty

Range of reduction ratios, italics and additional ratios on request	kW/rpm
SVAL 1120-88	
4,455	14,00
SVAL 1120-88	
4,800	12,30
5,304	10,60
SVAL 1200-66	
5,083	8,40
6,429	7,80
SVAL 1250-11	
1,973	26,00
4,238	23,40

kg	kW	(BHP)	kW	(BHP)	kW	(BHP)
-	500 rpm		750 rpm		1000 rpm *	
	7000	(9387)	10500	(14080)	14000	(18774)
-	500 rpm		750 rpm		1000 rpm *	
	6150	(8247)	9225	(12371)	12300	(16494)
	5300	(7107)	7950	(10661)	10600	(14215)
-	600 rpm		750 rpm		1000 rpm *	
	5040	(6759)	6300	(8448)	8400	(11264)
	4680	(6276)	5850	(7845)	7800	(10460)
-	500 rpm		750 rpm		900 rpm *	
	13000	(17433)	19500	(26150)	23400	(31379)
	11700	(15690)	17550	(23535)	21060	(28241)

* max. input speed

Continuous Duty

DLG 1113 – 110131

Engine Power

Twin input / single output reduction gearbox.

- Special ratio
- Offset
- Dimension
- PTO/PTI

Available on request.

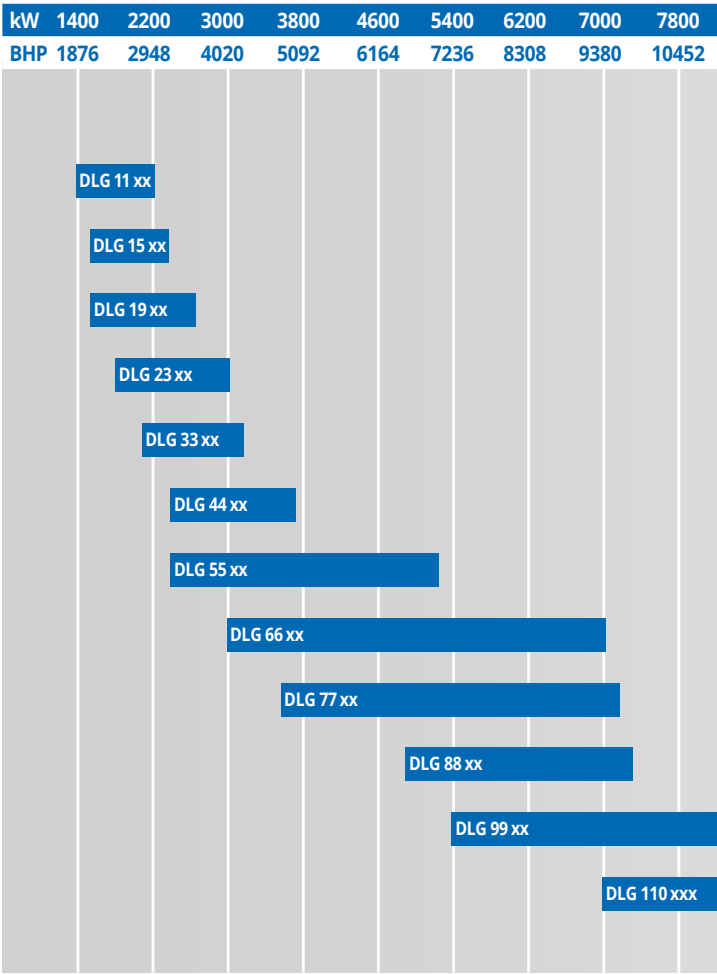

- Gearbox designation e. g. DLG 19xx:
  19 = size of clutch,
  xx = variations of output shaft- sizes
  according to output torque (13, 16, 31, ...131)

8600	9400	10200	11000	11800	12600	13400	14200	15000
11524	12596	13668	14740	15812	16884	17956	19028	20100

Continuous Duty

RDG/RDGL

Engine Power

- Reduction gearbox with roller bearing for dredging application
- With or without clutch
- Vertically offset
- High operating reliability

With (RDGL) or without clutch (RDG)

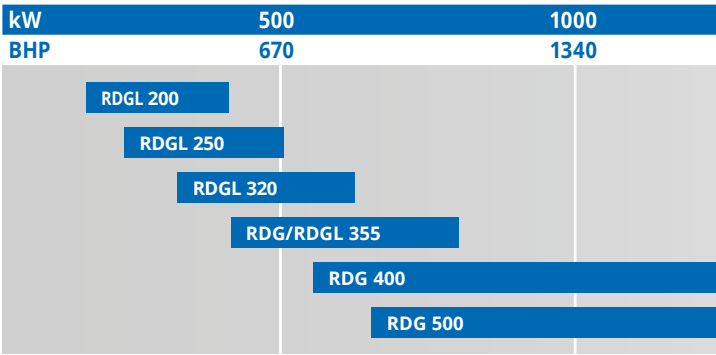

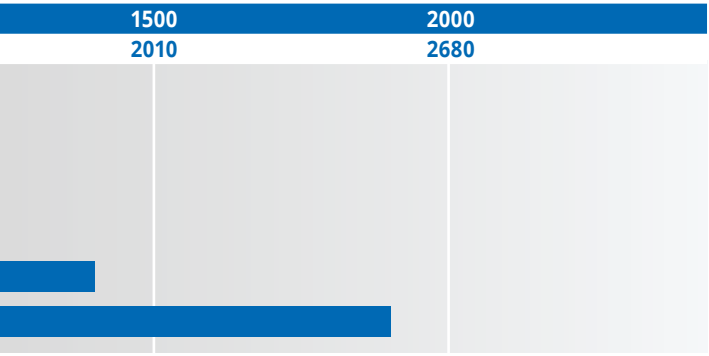
1500
2000
2010
2680

Medium Duty

Reduction ratios: bold = standard,
italics and additional ratios on request

			kW/rpm
WAF 164L			
3,964	**4,560**	**5,043**	0,22
5,950			0,20
WAF 164			
3,964	**4,560**	**5,043**	0,23
5,950			0,21
WAF 244L			
2,037	**2,538**		0,28
2,957			0,26
3,522			0,24
3,952			0,22
WAF 244			
2,037	**2,538**		0,29
2,957			0,27
3,478	**3,522**		0,25
3,952			0,23
WAF 264L			
3,519	**4,083**	**4,500**	0,28
5,050			0,26
5,476			0,24
5,800			0,23
WAF 264			
3,519	**4,083**	**4,500**	0,29
5,050			0,27
5,476			0,26
5,800			0,24
WAF 274L			
6,115	**6,400**		0,28
7,043			0,26
7,409			0,24
WAF 274			
6,115	**6,400**		0,29

kg	kW	(BHP)	kW	(BHP)	kW	(BHP)
525	1600 rpm		1800 rpm		2100 rpm *	
	352	(472)	396	(531)	462	(620)
	320	(429)	360	(483)	420	(563)
525	1600 rpm		1800 rpm		2100 rpm *	
	368	(493)	414	(555)	483	(648)
	336	(451)	378	(507)	441	(591)
455	1600 rpm		1800 rpm		2100 rpm *	
	448	(601)	504	(676)	588	(789)
	416	(558)	468	(628)	546	(732)
	384	(515)	432	(579)	504	(676)
	352	(472)	396	(531)	462	(620)
455	1600 rpm		1800 rpm		2100 rpm *	
	464	(622)	522	(700)	609	(817)
	432	(579)	486	(652)	567	(760)
	400	(536)	450	(603)	525	(704)
	368	(493)	414	(555)	483	(648)
700	1600 rpm		1800 rpm		2100 rpm *	
	448	(601)	504	(676)	588	(789)
	416	(558)	468	(628)	546	(732)
	384	(515)	432	(579)	504	(676)
	368	(493)	414	(555)	483	(648)
700	1600 rpm		1800 rpm		2100 rpm *	
	464	(622)	522	(700)	609	(817)
	432	(579)	486	(652)	567	(760)
	416	(558)	468	(628)	546	(732)
	384	(515)	432	(579)	504	(676)
725	1600 rpm		1800 rpm		2100 rpm *	
	448	(601)	504	(676)	588	(789)
	416	(558)	468	(628)	546	(732)
	384	(515)	432	(579)	504	(676)
725	1600 rpm		1800 rpm		2100 rpm *	
	464	(622)	522	(700)	609	(817)

* max. input speed

Medium Duty

Reduction ratios: bold = standard,
italics and additional ratios on request

					kW/rpm
WAF 274					
7,043					0,27
7,409					0,25
WAF 344L					
1,972	**2,452**	**2,963**			0,35
3,571					0,32
4,053					0,30
WAF 344					
1,972	**2,452**	**2,963**			0,36
3,280	**3,571**				0,33
4,053					0,31
WAF 364L					
3,485	**3,933**	**4,481**	**4,920**	**5,435**	0,35
6,048					0,34
WAF 364					
3,485	**3,933**	**4,481**	**4,920**	**5,435**	0,36
6,048					0,35
WAF 374L					
6,120	**6,417**	**7,091**			0,35
7,476					0,32
WAF 374					
6,120	**6,417**	**6,739**	**7,091**		0,36
7,476					0,33
WAF 444L					
2,962					0,45
3,522					0,41
3,952					0,39
WAF 444					
2,962					0,46
3,522					0,42
3,952					0,40
WAF 464L					
4,000	**4,577**	**5,042**	**5,591**		0,45

kg	kW	(BHP)	kW	(BHP)	kW	(BHP)
725	**1600 rpm**		**1800 rpm**		**2100 rpm ***	
	432	(579)	486	(652)	567	(760)
	400	(536)	450	(603)	525	(704)
730	**1600 rpm**		**1800 rpm**		**2100 rpm ***	
	560	(751)	630	(845)	735	(986)
	512	(687)	576	(772)	672	(901)
	480	(644)	540	(724)	630	(845)
730	**1600 rpm**		**1800 rpm**		**2100 rpm ***	
	576	(772)	648	(869)	756	(1014)
	528	(708)	594	(797)	693	(929)
	496	(665)	558	(748)	651	(873)
810	**1600 rpm**		**1800 rpm**		**2100 rpm ***	
	560	(751)	630	(845)	735	(986)
	544	(730)	612	(821)	714	(957)
810	**1600 rpm**		**1800 rpm**		**2100 rpm ***	
	576	(772)	648	(869)	756	(1014)
	560	(751)	630	(845)	735	(986)
1200	**1600 rpm**		**1800 rpm**		**2100 rpm ***	
	560	(751)	630	(845)	735	(986)
	512	(687)	576	(772)	672	(901)
1200	**1600 rpm**		**1800 rpm**		**2100 rpm ***	
	576	(772)	648	(869)	756	(1014)
	528	(708)	594	(797)	693	(929)
760	**1600 rpm**		**1800 rpm**		**2100 rpm ***	
	720	(966)	810	(1086)	945	(1267)
	656	(880)	738	(990)	861	(1155)
	624	(837)	702	(941)	819	(1098)
760	**1600 rpm**		**1800 rpm**		**2100 rpm ***	
	736	(987)	828	(1110)	966	(1295)
	672	(901)	756	(1014)	882	(1183)
	640	(858)	720	(966)	840	(1126)
940	**1600 rpm**		**1800 rpm**		**2100 rpm ***	
	720	(966)	810	(1086)	945	(1267)

* max. input speed

Medium Duty

Reduction ratios: bold = standard,
italics and additional ratios on request

				kW/rpm
WAF 464L				
5,905				0,44
WAF 464				
4,000	**4,577**	**5,042**	**5,591**	0,46
5,905				0,45
WAF 474L				
6,120	**6,417**	**7,091**		0,45
7,476				0,44
WAF 474				
6,120	**6,417**	**7,091**		0,46
7,476				0,45
WAF 563L				
4,545	**5,050**	**5,421**		0,57
5,947				0,54
WAF 563				
4,545	**5,050**	**5,421**		0,59
5,947				0,55

kg	kW	(BHP)	kW	(BHP)	kW	(BHP)
940	**1600 rpm**		**1800 rpm**		**2100 rpm ***	
	704	(944)	792	(1062)	924	(1239)
940	**1600 rpm**		**1800 rpm**		**2100 rpm ***	
	736	(987)	828	(1110)	966	(1295)
	720	(966)	810	(1086)	945	(1267)
1830	**1600 rpm**		**1800 rpm**		**2100 rpm ***	
	720	(966)	810	(1086)	945	(1267)
	704	(944)	792	(1062)	924	(1239)
1830	**1600 rpm**		**1800 rpm**		**2100 rpm ***	
	736	(987)	828	(1110)	966	(1295)
	720	(966)	810	(1086)	945	(1267)
1445	**1600 rpm**		**1800 rpm**		**2100 rpm ***	
	912	(1223)	1026	(1376)	1197	(1605)
	864	(1159)	972	(1303)	1134	(1521)
1445	**1600 rpm**		**1800 rpm**		**2100 rpm ***	
	944	(1266)	1062	(1424)	1239	(1661)
	880	(1180)	990	(1328)	1155	(1549)

* max. input speed

Medium Duty

Reduction ratios: bold = standard,
italics and additional ratios on request

				kW/rpm
WVS 234/1	indicated max. rpm on request			
1,179	*1,500*	**2,036**		0,26
2,542				0,25
2,864				0,24
WVS 334	indicated max. rpm on request			
1,122	**1,485**			0,30
2,037				0,29
2,407	**2,538**			0,28
2,956				0,27
3,522				0,26
WVS 430/1	indicated max. rpm on request			
1,485				0,51
2,037				0,50
2,458				0,49
2,773				0,48
2,905				0,47
3,286	**3,316**			0,46
3,550				0,43
WVS 730/1L	indicated max. rpm on request			
2,036	**2,542**	**3,048**		0,70
3,542				0,60
3,954				0,55
WVS 730/1	indicated max. rpm on request			
2,036	**2,269**	**2,542**	**3,048**	0,85
3,542				0,82
3,954				0,76
WVS 930/1L	indicated max. rpm on request			
1,525	*2,032*	*2,482*		1,00
3,044				0,98
3,954				0,75
WVS 930/1	indicated max. rpm on request			
1,525	*2,032*			1,20

Medium-, Light- and Pleasure-Duty: U-Drive on request.

kg	kW	(BHP)	kW	(BHP)	kW	(BHP)
295	1800 rpm		2100 rpm		2600 rpm *	
	468	(628)	546	(732)	676	(907)
	450	(603)	525	(704)	650	(872)
	432	(579)	504	(676)	624	(837)
340	1800 rpm		2100 rpm		2600 rpm *	
	540	(724)	630	(845)	780	(1046)
	522	(700)	609	(817)	754	(1011)
	504	(676)	588	(789)	728	(976)
	486	(652)	567	(760)	702	(941)
	468	(628)	546	(732)	676	(907)
490	1800 rpm		2100 rpm		2600 rpm *	
	918	(1231)	1071	(1436)	1326	(1778)
	900	(1207)	1050	(1408)	1300	(1743)
	882	(1183)	1029	(1380)	1274	(1708)
	864	(1159)	1008	(1352)	1248	(1674)
	846	(1134)	987	(1324)	1222	(1639)
	828	(1110)	966	(1295)	1196	(1604)
	774	(1038)	903	(1211)	1118	(1499)
725	1800 rpm		2100 rpm		2500 rpm *	
	1260	(1690)	1470	(1971)	1750	(2347)
	1080	(1448)	1260	(1690)	1500	(2011)
	990	(1328)	1155	(1549)	1375	(1844)
725	1800 rpm		2100 rpm		2500 rpm *	
	1530	(2052)	1785	(2394)	2125	(2850)
	1476	(1979)	1722	(2309)	2050	(2749)
	1373	(1842)	1602	(2149)	1908	(2558)
950	1800 rpm		2100 rpm		2500 rpm *	
	1800	(2414)	2100	(2816)	2500	(3352)
	1764	(2366)	2058	(2760)	2450	(3285)
	1350	(1810)	1575	(2112)	1875	(2514)
950	1800 rpm		2100 rpm		2500 rpm *	
	2160	(2897)	2520	(3379)	3000	(4023)

* max. input speed on request

Medium Duty

Reduction ratios: bold = standard,
italics and additional ratios on request

					kW/rpm
WVS 930/1	indicated max. rpm on request				
2,482					1,18
3,044					1,13
3,954					1,00
WVS 1130L	indicated max. rpm on request				
1,512	*2,029*	*2,433*	*2,962*		1,60
3,478					1,45
3,905					1,25
WVS 1130	indicated max. rpm on request				
1,512	*2,029*	*2,433*	*2,962*		1,80
3,478					1,78
3,905					1,73
WVS 1540	indicated max. rpm on request				
2,952	**3,368**	**3,947**	**4,350**		1,50
4,632					1,46
WVS 1930	indicated max. rpm on request				
1,410	*2,032*	*2,458*	*2,952*	*3,368*	1,85
3,864					1,48
WVS 2230	indicated max. rpm on request				
1,513	*2,025*	*2,414*	*2,630*	*2,920*	2,35
WVS 2240	indicated max. rpm on request				
3,039	*3,375*	*3,565*	*3,818*		2,35
4,130					2,34

Medium-, Light- and Pleasure-Duty: U-Drive on request.

kg	kW	(BHP)	kW	(BHP)	kW	(BHP)
950	**1800 rpm**		**2100 rpm**		**2500 rpm ***	
	2124	(2848)	2478	(3323)	2950	(3956)
	2034	(2728)	2373	(3182)	2825	(3788)
	1802	(2416)	2102	(2819)	2502	(3356)
1600	**1600 rpm**		**1800 rpm**		**2300 rpm ***	
	2560	(3433)	2880	(3862)	3680	(4935)
	2320	(3111)	2610	(3500)	3335	(4472)
	2000	(2682)	2250	(3017)	2875	(3855)
1600	**1600 rpm**		**1800 rpm**		**2300 rpm ***	
	2880	(3862)	3240	(4345)	4140	(5552)
	2848	(3819)	3204	(4297)	4094	(5490)
	2768	(3712)	3114	(4176)	3979	(5336)
1450	**1600 rpm**		**1800 rpm**		**2300 rpm ***	
	2400	(3218)	2700	(3621)	3450	(4626)
	2338	(3135)	2630	(3527)	3360	(4506)
1550	**1600 rpm**		**1800 rpm**		**2300 rpm ***	
	2960	(3969)	3330	(4466)	4255	(5706)
	2374	(3184)	2671	(3582)	3413	(4577)
2150	**1600 rpm**		**1800 rpm**		**2100 rpm ***	
	3760	(5042)	4230	(5672)	4935	(6618)
2185	**1600 rpm**		**1800 rpm**		**2100 rpm ***	
	3760	(5042)	4230	(5672)	4935	(6618)
	3744	(5021)	4212	(5648)	4914	(6590)

* max. input speed on request

Medium Duty

Reduction ratios: bold = standard,
italics and additional ratios on request

					kW/rpm
AF 264					
3,519	*4,083*	*4,500*			0,29
5,050					0,27
5,476					0,26
5,800					0,24
AF 344					
1,972	*2,452*	*2,963*			0,36
3,280	*3,571*				0,33
4,053					0,31
AF 364					
3,485	*3,933*	*4,481*	*4,920*	*5,435*	0,36
6,048					0,35

kg	kW	(BHP)	kW	(BHP)	kW	(BHP)
670	**1600 rpm**		**1800 rpm**		**2100 rpm ***	
	464	(622)	522	(700)	609	(817)
	432	(579)	486	(652)	567	(760)
	416	(558)	468	(628)	546	(732)
	384	(515)	432	(579)	504	(676)
700	**1600 rpm**		**1800 rpm**		**2100 rpm ***	
	576	(772)	648	(869)	756	(1014)
	528	(708)	594	(797)	693	(929)
	496	(665)	558	(748)	651	(873)
770	**1600 rpm**		**1800 rpm**		**2100 rpm ***	
	576	(772)	648	(869)	756	(1014)
	560	(751)	630	(845)	735	(986)

* max. input speed

Medium Duty

Reduction ratios: bold = standard,
italics and additional ratios on request

				kW/rpm
WLS 234/1	indicated max. rpm on request			
1,179	*1,500*	**2,036**		0,26
2,542				0,25
2,864				0,24
WLS 334	indicated max. rpm on request			
1,122	**1,485**			0,30
2,037				0,29
2,407	*2,538*			0,28
2,956				0,27
3,522				0,26
WLS 430/1	indicated max. rpm on request			
1,485				0,51
2,037				0,50
2,458				0,49
2,773				0,48
2,905				0,47
3,286	*3,316*			0,46
3,550				0,43
WLS 730/1	indicated max. rpm on request			
2,036	**2,269**	**2,542**	*3,048*	0,85
3,542				0,82
3,954				0,76
WLS 930/1	indicated max. rpm on request			
1,525	*2,032*			1,20
2,482				1,18
3,044				1,13
3,954				1,00
WLS 1130	indicated max. rpm on request			
1,512	*2,029*	*2,433*	*2,962*	1,80
3,478				1,78
3,905				1,73

kg	kW	(BHP)	kW	(BHP)	kW	(BHP)
295	**1800 rpm**		**2100 rpm**		**2600 rpm ***	
	468	(628)	546	(732)	676	(907)
	450	(603)	525	(704)	650	(872)
	432	(579)	504	(676)	624	(837)
340	**1800 rpm**		**2100 rpm**		**2600 rpm ***	
	540	(724)	630	(845)	780	(1046)
	522	(700)	609	(817)	754	(1011)
	504	(676)	588	(789)	728	(976)
	486	(652)	567	(760)	702	(941)
	468	(628)	546	(732)	676	(907)
490	**1800 rpm**		**2100 rpm**		**2600 rpm ***	
	918	(1231)	1071	(1436)	1326	(1778)
	900	(1207)	1050	(1408)	1300	(1743)
	882	(1183)	1029	(1380)	1274	(1708)
	864	(1159)	1008	(1352)	1248	(1674)
	846	(1134)	987	(1324)	1222	(1639)
	828	(1110)	966	(1295)	1196	(1604)
	774	(1038)	903	(1211)	1118	(1499)
725	**1800 rpm**		**2100 rpm**		**2500 rpm ***	
	1530	(2052)	1785	(2394)	2125	(2850)
	1476	(1979)	1722	(2309)	2050	(2749)
	1373	(1842)	1602	(2149)	1908	(2558)
950	**1800 rpm**		**2100 rpm**		**2500 rpm ***	
	2160	(2897)	2520	(3379)	3000	(4023)
	2124	(2848)	2478	(3323)	2950	(3956)
	2034	(2728)	2373	(3182)	2825	(3788)
	1802	(2416)	2102	(2819)	2502	(3356)
1600	**1600 rpm**		**1800 rpm**		**2300 rpm ***	
	2880	(3862)	3240	(4345)	4140	(5552)
	2848	(3819)	3204	(4297)	4094	(5490)
	2768	(3712)	3114	(4176)	3979	(5336)

* max. input speed on request

Medium Duty

Reduction ratios: bold = standard,
italics and additional ratios on request

				kW/rpm
WLS 1540	indicated max. rpm on request			
2,952	*3,368*	*3,947*	*4,350*	1,50
4,632				1,46
WLS 1930	indicated max. rpm on request			
1,410	*2,032*	*2,458*	*2,952*	1,85
3,368				1,70
3,864				1,48

kg	kW	(BHP)	kW	(BHP)	kW	(BHP)
1450	**1600 rpm**		**1800 rpm**		**2300 rpm ***	
	2400	(3218)	2700	(3621)	3450	(4626)
	2338	(3135)	2630	(3527)	3360	(4506)
1550	**1600 rpm**		**1800 rpm**		**2300 rpm ***	
	2960	(3969)	3330	(4466)	4255	(5706)
	2720	(3648)	3060	(4103)	3910	(5243)
	2374	(3184)	2671	(3582)	3413	(4577)

* max. input speed on request

Medium Duty

Range of reduction ratios, italics and additional ratios on request					kW/rpm
VLJ 430					
1,306	**2,037**	**2,458**			0,52
2,905					0,40
VLJ 730/1					
1,539	*2,036*	**2,542**			0,75
3,048					0,71
VLJ 930/1					
1,186	*1,525*	**1,725**	**1,849**	*2,032*	1,10
2,357	*2,482*				1,05
3,044					0,89

kg	kW	(BHP)	kW	(BHP)	kW	(BHP)
360	**1600 rpm**		**1800 rpm**		**2200 rpm ***	
	832	(1116)	936	(1255)	1144	(1534)
	640	(858)	720	(966)	880	(1180)
560	**1600 rpm**		**1800 rpm**		**2200 rpm ***	
	1200	(1609)	1350	(1810)	1650	(2213)
	1136	(1523)	1278	(1714)	1562	(2095)
740	**1600 rpm**		**1800 rpm**		**2200 rpm ***	
	1760	(2360)	1980	(2655)	2420	(3245)
	1680	(2253)	1890	(2534)	2310	(3098)
	1424	(1910)	1602	(2148)	1958	(2626)

* max. input speed

Light Duty

Reduction ratios: bold = standard,
italics and additional ratios on request

			kW/rpm
WAF 164L			
3,964	**4,560**	**5,043**	0,23
5,950			0,21
WAF 164			
3,964	**4,560**	**5,043**	0,24
5,950			0,22
WAF 244L			
2,037	**2,538**		0,28
2,957			0,27
3,522			0,25
3,952			0,23
WAF 244			
2,037	**2,538**		0,29
2,957			0,28
3,522			0,26
3,478			0,26
3,952			0,24
WAF 264L			
3,519	**4,083**	**4,500**	0,28
5,050			0,27
5,476			0,26
5,800			0,24
WAF 264			
3,519	**4,083**	**4,500**	0,29
5,050			0,28
5,476			0,27
5,800			0,25
WAF 274L			
6,115	**6,400**		0,28
7,043			0,27
7,409			0,25

kg	kW	(BHP)	kW	(BHP)	kW	(BHP)
525	**1600 rpm**		**1800 rpm**		**2100 rpm ***	
	368	(493)	414	(555)	483	(648)
	336	(451)	378	(507)	441	(591)
525	**1600 rpm**		**1800 rpm**		**2100 rpm ***	
	384	(515)	432	(579)	504	(676)
	352	(472)	396	(531)	462	(620)
455	**1600 rpm**		**1800 rpm**		**2100 rpm ***	
	448	(601)	504	(676)	588	(789)
	432	(579)	486	(652)	567	(760)
	400	(536)	450	(603)	525	(704)
	368	(493)	414	(555)	483	(648)
455	**1600 rpm**		**1800 rpm**		**2100 rpm ***	
	469	(629)	527	(707)	615	(825)
	448	(601)	504	(676)	588	(789)
	416	(558)	468	(628)	546	(732)
	411	(551)	463	(620)	540	(724)
	384	(515)	432	(579)	504	(676)
700	**1600 rpm**		**1800 rpm**		**2100 rpm ***	
	448	(601)	504	(676)	588	(789)
	432	(579)	486	(652)	567	(760)
	416	(558)	468	(628)	546	(732)
	384	(515)	432	(579)	504	(676)
700	**1600 rpm**		**1800 rpm**		**2100 rpm ***	
	469	(629)	527	(707)	615	(825)
	448	(601)	504	(676)	588	(789)
	432	(579)	486	(652)	567	(760)
	400	(536)	450	(603)	525	(704)
725	**1600 rpm**		**1800 rpm**		**2100 rpm ***	
	448	(601)	504	(676)	588	(789)
	432	(579)	486	(652)	567	(760)
	400	(536)	450	(603)	525	(704)

* max. input speed

Light Duty

Reduction ratios: bold = standard,
italics and additional ratios on request

					kW/rpm
WAF 274					
6,115	**6,400**				0,29
7,043					0,28
7,409					0,26
WAF 344L					
1,972	**2,452**	**2,963**			0,36
3,571					0,33
4,053					0,31
WAF 344					
1,972	**2,452**	**2,963**			0,37
3,280	**3,571**				0,34
4,053					0,32
WAF 364L					
3,485	**3,933**	**4,481**	**4,920**	**5,435**	0,36
6,048					0,35
WAF 364					
3,485	**3,933**	**4,481**	**4,920**	**5,435**	0,37
6,048					0,36
WAF 374L					
6,120	**6,417**	**7,091**			0,36
7,476					0,33
WAF 374					
6,120	**6,417**	**6,739**	**7,091**		0,37
7,476					0,34
WAF 444L					
2,962					0,46
3,522					0,43
3,952					0,40
WAF 444					
2,962					0,47
3,522					0,44
3,952					0,41

kg	kW	(BHP)	kW	(BHP)	kW	(BHP)
725	1600 rpm		1800 rpm		2100 rpm *	
	469	(629)	527	(707)	615	(825)
	448	(601)	504	(676)	588	(789)
	416	(558)	468	(628)	546	(732)
730	1600 rpm		1800 rpm		2100 rpm *	
	576	(772)	648	(869)	756	(1014)
	528	(708)	594	(797)	693	(929)
	496	(665)	558	(748)	651	(873)
730	1600 rpm		1800 rpm		2100 rpm *	
	592	(794)	666	(893)	777	(1042)
	544	(730)	612	(821)	714	(957)
	512	(687)	576	(772)	672	(901)
810	1600 rpm		1800 rpm		2100 rpm *	
	576	(772)	648	(869)	756	(1014)
	560	(751)	630	(845)	735	(986)
810	1600 rpm		1800 rpm		2100 rpm *	
	592	(794)	666	(893)	777	(1042)
	576	(772)	648	(869)	756	(1014)
1200	1600 rpm		1800 rpm		2100 rpm *	
	576	(772)	648	(869)	756	(1014)
	528	(708)	594	(797)	693	(929)
1200	1600 rpm		1800 rpm		2100 rpm *	
	592	(794)	666	(893)	777	(1042)
	544	(730)	612	(821)	714	(957)
760	1600 rpm		1800 rpm		2100 rpm *	
	736	(987)	828	(1110)	966	(1295)
	688	(923)	774	(1038)	903	(1211)
	640	(858)	720	(966)	840	(1126)
760	1600 rpm		1800 rpm		2100 rpm *	
	752	(1008)	846	(1134)	987	(1324)
	704	(944)	792	(1062)	924	(1239)
	656	(880)	738	(990)	861	(1155)

* max. input speed

Light Duty

Reduction ratios: bold = standard,
italics and additional ratios on request

				kW/rpm
WAF 464L				
4,000	**4,577**	**5,042**	**5,591**	0,46
5,905				0,45
WAF 464				
4,000	**4,577**	**5,042**	**5,591**	0,47
5,905				0,46
WAF 474L				
6,120	**6,417**	**7,091**		0,46
7,476				0,45
WAF 474				
6,120	**6,417**	**7,091**		0,47
7,476				0,46
WAF 563L				
4,545	**5,050**	**5,421**	**5,947**	0,57
WAF 563				
4,545	**5,050**	**5,421**		0,59
5,947				0,58

kg	kW	(BHP)	kW	(BHP)	kW	(BHP)
940	**1600 rpm**		**1800 rpm**		**2100 rpm ***	
	736	(987)	828	(1110)	966	(1295)
	720	(966)	810	(1086)	945	(1267)
940	**1600 rpm**		**1800 rpm**		**2100 rpm ***	
	752	(1008)	846	(1134)	987	(1324)
	736	(987)	828	(1110)	966	(1295)
1830	**1600 rpm**		**1800 rpm**		**2100 rpm ***	
	736	(987)	828	(1110)	966	(1295)
	720	(966)	810	(1086)	945	(1267)
1830	**1600 rpm**		**1800 rpm**		**2100 rpm ***	
	752	(1008)	846	(1134)	987	(1324)
	736	(987)	828	(1110)	966	(1295)
1445	**1600 rpm**		**1800 rpm**		**2100 rpm ***	
	912	(1223)	1026	(1376)	1197	(1605)
1445	**1600 rpm**		**1800 rpm**		**2100 rpm ***	
	944	(1266)	1062	(1424)	1239	(1661)
	928	(1244)	1044	(1400)	1218	(1633)

* max. input speed

Light Duty

Reduction ratios: bold = standard,
italics and additional ratios on request

					kW/rpm
WVS 234/1	indicated max. rpm on request				
1,179	*1,500*	**2,036**	*2,542*		0,29
2,864					0,26
WVS 334	indicated max. rpm on request				
1,122	**1,485**				0,36
2,037					0,35
2,407	**2,538**				0,34
2,956					0,33
3,522					0,31
WVS 430/1	indicated max. rpm on request				
1,485	**2,037**	**2,458**			0,58
2,773					0,57
2,905					0,56
3,286					0,49
3,316					0,47
3,550					0,43
WVS 730/1L	indicated max. rpm on request				
2,036	**2,542**	**3,048**			0,70
3,542					0,65
3,954					0,55
WVS 730/1	indicated max. rpm on request				
2,036	**2,269**	**2,542**	**3,048**		0,92
3,542					0,84
3,954					0,76
WVS 930/1L	indicated max. rpm on request				
1,525	*2,032*	*2,482*	*3,044*		1,00
3,954					0,80
WVS 930/1	indicated max. rpm on request				
1,525	*2,032*	**2,482**	**3,044**		1,28
3,954					1,00
WVS 1130L	indicated max. rpm on request				
1,512	*2,029*	*2,433*	*2,962*	*3,478*	1,60

kg	kW	(BHP)	kW	(BHP)	kW	(BHP)
295	**1800 rpm**		**2100 rpm**		**2600 rpm ***	
	522	(700)	609	(817)	754	(1011)
	466	(625)	544	(729)	673	(903)
340	**1800 rpm**		**2100 rpm**		**2600 rpm ***	
	648	(869)	756	(1014)	936	(1255)
	630	(845)	735	(986)	910	(1220)
	612	(821)	714	(957)	884	(1185)
	594	(797)	693	(929)	858	(1151)
	558	(748)	651	(873)	806	(1081)
490	**1800 rpm**		**2100 rpm**		**2600 rpm ***	
	1044	(1400)	1218	(1633)	1508	(2022)
	1026	(1376)	1197	(1605)	1482	(1987)
	1008	(1352)	1176	(1577)	1456	(1952)
	880	(1180)	1027	(1377)	1271	(1705)
	842	(1130)	983	(1318)	1217	(1632)
	774	(1038)	903	(1211)	1118	(1499)
725	**1800 rpm**		**2100 rpm**		**2500 rpm ***	
	1260	(1690)	1470	(1971)	1750	(2347)
	1170	(1569)	1365	(1830)	1625	(2179)
	990	(1328)	1155	(1549)	1375	(1844)
725	**1800 rpm**		**2100 rpm**		**2500 rpm ***	
	1656	(2221)	1932	(2591)	2300	(3084)
	1510	(2025)	1762	(2363)	2098	(2813)
	1373	(1842)	1602	(2149)	1908	(2558)
950	**1800 rpm**		**2100 rpm**		**2500 rpm ***	
	1800	(2414)	2100	(2816)	2500	(3352)
	1440	(1931)	1680	(2253)	2000	(2682)
950	**1800 rpm**		**2100 rpm**		**2500 rpm ***	
	2304	(3090)	2688	(3605)	3200	(4291)
	1802	(2416)	2102	(2819)	2502	(3356)
1600	**1800 rpm**		**1950 rpm**		**2300 rpm ***	
	2880	(3862)	3120	(4184)	3680	(4935)

* max. input speed on request

Light Duty

Reduction ratios: bold = standard,
italics and additional ratios on request

					kW/rpm
WVS 1130L	indicated max. rpm on request				
3,905					1,30
WVS 1130	indicated max. rpm on request				
1,512	*2,029*	*2,433*	*2,962*	*3,478*	1,85
3,905					
WVS 1540	indicated max. rpm on request				
2,952	**3,368**	**3,947**	**4,350**		1,50
4,632					1,46
WVS 1930	indicated max. rpm on request				
1,410	*2,032*	*2,458*	*2,952*	*3,368*	1,85
3,864					1,48
WVS 2230	indicated max. rpm on request				
1,513	*2,025*	*2,414*	*2,630*	*2,920*	2,45
WVS 2240	indicated max. rpm on request				
3,039	*3,375*	*3,565*	*3,818*	*4,130*	2,45

kg	kW	(BHP)	kW	(BHP)	kW	(BHP)
1600	**1800 rpm**		**1950 rpm**		**2300 rpm ***	
	2340	(3138)	2535	(3399)	2990	(4010)
1600	**1800 rpm**		**1950 rpm**		**2300 rpm ***	
	3330	(4466)	3608	(4838)	4255	(5706)
1450	**1800 rpm**		**1950 rpm**		**2300 rpm ***	
	2700	(3621)	2925	(3922)	3450	(4626)
	2630	(3527)	2849	(3820)	3360	(4506)
1550	**1800 rpm**		**1950 rpm**		**2300 rpm ***	
	3330	(4466)	3608	(4838)	4255	(5706)
	2671	(3582)	2894	(3881)	3413	(4577)
2150	**1800 rpm**		**1950 rpm**		**2100 rpm ***	
	4410	(5914)	4778	(6407)	5145	(6899)
2185	**1800 rpm**		**1950 rpm**		**2100 rpm ***	
	4410	(5914)	4778	(6407)	5145	(6899)

* max. input speed on request

Light Duty

Reduction ratios: bold = standard,
italics and additional ratios on request

					kW/rpm
AF 264					
3,519	*4,083*	*4,500*			0,29
5,050					0,28
5,476					0,27
5,800					0,25
AF 344					
1,972	*2,452*	*2,963*			0,37
3,280	*3,571*				0,34
4,053					0,32
AF 364					
3,485	*3,933*	*4,481*	*4,920*	*5,435*	0,37
6,048					0,36

kg	kW	(BHP)	kW	(BHP)	kW	(BHP)
670	**1600 rpm**		**1800 rpm**		**2100 rpm ***	
	469	(629)	527	(707)	615	(825)
	448	(601)	504	(676)	588	(789)
	432	(579)	486	(652)	567	(760)
	400	(536)	450	(603)	525	(704)
700	**1600 rpm**		**1800 rpm**		**2100 rpm ***	
	592	(794)	666	(893)	777	(1042)
	544	(730)	612	(821)	714	(957)
	512	(687)	576	(772)	672	(901)
770	**1600 rpm**		**1800 rpm**		**2100 rpm ***	
	592	(794)	666	(893)	777	(1042)
	576	(772)	648	(869)	756	(1014)

* max. input speed

Light Duty

Reduction ratios: bold = standard,
italics and additional ratios on request

					kW/rpm
WLS 234/1	indicated max. rpm on request				
1,179	*1,500*	**2,036**	*2,542*		0,29
2,864					0,26
WLS 334	indicated max. rpm on request				
1,122	**1,485**				0,36
2,037					0,35
2,407	*2,538*				0,34
2,956					0,33
3,522					0,31
WLS 430/1	indicated max. rpm on request				
1,485	**2,037**	**2,458**			0,58
2,773					0,57
2,905					0,56
3,286					0,49
3,316					0,47
3,550					0,43
WLS 730/1	indicated max. rpm on request				
2,036	**2,269**	**2,542**	*3,048*		0,92
3,542					0,84
3,954					0,76
WLS 930/1	indicated max. rpm on request				
1,525	*2,032*	*2,482*	*3,044*		1,28
3,954					1,00
WLS 1130	indicated max. rpm on request				
1,512	*2,029*	*2,433*	*2,962*	*3,478*	1,85
3,905					
WLS 1540	indicated max. rpm on request				
2,952	*3,368*	*3,947*	*4,350*		1,50
4,632					1,46
WLS 1930	indicated max. rpm on request				
1,410	*2,032*	*2,458*	*2,952*		1,85
3,368					1,70
3,864					1,48

kg	kW	(BHP)	kW	(BHP)	kW	(BHP)
295	1800 rpm		2100 rpm		2600 rpm *	
	522	(700)	609	(817)	754	(1011)
	466	(625)	544	(729)	673	(903)
340	1800 rpm		2100 rpm		2600 rpm *	
	648	(869)	756	(1014)	936	(1255)
	630	(845)	735	(986)	910	(1220)
	612	(821)	714	(957)	884	(1185)
	594	(797)	693	(929)	858	(1151)
	558	(748)	651	(873)	806	(1081)
490	1800 rpm		2100 rpm		2600 rpm *	
	1044	(1400)	1218	(1633)	1508	(2022)
	1026	(1376)	1197	(1605)	1482	(1987)
	1008	(1352)	1176	(1577)	1456	(1952)
	880	(1180)	1027	(1377)	1271	(1705)
	842	(1130)	983	(1318)	1217	(1632)
	774	(1038)	903	(1211)	1118	(1499)
725	1800 rpm		2100 rpm		2500 rpm *	
	1656	(2221)	1932	(2591)	2300	(3084)
	1510	(2025)	1762	(2363)	2098	(2813)
	1373	(1842)	1602	(2149)	1908	(2558)
950	1800 rpm		2100 rpm		2500 rpm *	
	2304	(3090)	2688	(3605)	3200	(4291)
	1802	(2416)	2102	(2819)	2502	(3356)
1600	1800 rpm		1950 rpm		2300 rpm *	
	3330	(4466)	3608	(4838)	4255	(5706)
1450	1800 rpm		1950 rpm		2300 rpm *	
	2700	(3621)	2925	(3922)	3450	(4626)
	2630	(3527)	2849	(3820)	3360	(4506)
1550	1800 rpm		1950 rpm		2300 rpm *	
	3330	(4466)	3608	(4838)	4255	(5706)
	3060	(4103)	3315	(4445)	3910	(5243)
	2671	(3582)	2894	(3881)	3413	(4577)

* max. input speed on request

Light Duty

Range of reduction ratios, italics and additional ratios on request					kW/rpm
VLJ 730/1					
1,539	*2,036*	**2,542**			0,92
3,048					0,84
VLJ 930/1					
1,186	*1,525*	**1,725**	**1,849**	*2,032*	1,26
2,357	*2,482*				1,22
3,044					1,05

kg	kW	(BHP)	kW	(BHP)	kW	(BHP)
560	**1800 rpm**		**2100 rpm**		**2500 rpm ***	
	1656	(2221)	1932	(2591)	2300	(3084)
	1512	(2028)	1764	(2366)	2100	(2816)
740	**1800 rpm**		**2100 rpm**		**2500 rpm ***	
	2268	(3041)	2646	(3548)	3150	(4224)
	2196	(2945)	2562	(3436)	3050	(4090)
	1890	(2534)	2205	(2957)	2625	(3520)

* max. input speed on request

Pleasure Duty

Reduction ratios: bold = standard,
italics and additional ratios on request

				kW/rpm
WAF 164L				
3,964	**4,560**	**5,043**		0,24
5,950				0,22
WAF 164				
3,964	**4,560**	**5,043**		0,25
5,950				0,23
WAF 244L				
2,037	**2,538**	**2,957**		0,28
3,522				0,26
3,952				0,24
WAF 244				
2,037	**2,538**			0,29
2,957				0,29
3,522				0,27
3,478				0,26
3,952				0,25
WAF 264L				
3,519	**4,083**	**4,500**	**5,050**	0,28
5,476				0,27
5,800				0,25
WAF 264				
3,519	**4,083**	**4,500**		0,29
5,050				0,29
5,476				0,28
5,800				0,26
WAF 274L				
6,115	**6,400**	**7,043**		0,28
7,409				0,26
WAF 274				
6,115	**6,400**	**7,043**		0,29
7,409				0,27

kg	kW	(BHP)	kW	(BHP)	kW	(BHP)
525	**1900 rpm**		**2100 rpm**		**2300 rpm ***	
	456	(611)	504	(676)	552	(740)
	418	(561)	462	(620)	506	(679)
525	**1900 rpm**		**2100 rpm**		**2300 rpm ***	
	475	(637)	525	(704)	575	(771)
	437	(586)	483	(648)	529	(709)
455	**1900 rpm**		**2100 rpm**		**2300 rpm ***	
	532	(713)	588	(789)	644	(864)
	494	(662)	546	(732)	598	(802)
	456	(611)	504	(676)	552	(740)
455	**1900 rpm**		**2100 rpm**		**2300 rpm ***	
	557	(747)	615	(825)	674	(904)
	551	(739)	609	(817)	667	(894)
	513	(688)	567	(760)	621	(833)
	488	(655)	540	(724)	591	(793)
	475	(637)	525	(704)	575	(771)
700	**1900 rpm**		**2100 rpm**		**2300 rpm ***	
	532	(713)	588	(789)	644	(864)
	513	(688)	567	(760)	621	(833)
	475	(637)	525	(704)	575	(771)
700	**1900 rpm**		**2100 rpm**		**2300 rpm ***	
	557	(747)	615	(825)	674	(904)
	551	(739)	609	(817)	667	(894)
	532	(713)	588	(789)	644	(864)
	494	(662)	546	(732)	598	(802)
725	**1900 rpm**		**2100 rpm**		**2300 rpm ***	
	532	(713)	588	(789)	644	(864)
	494	(662)	546	(732)	598	(802)
725	**1900 rpm**		**2100 rpm**		**2300 rpm ***	
	557	(747)	615	(825)	674	(904)
	513	(688)	567	(760)	621	(833)

* max. input speed

Pleasure Duty

Reduction ratios: bold = standard,
italics and additional ratios on request

					kW/rpm
WAF 344L					
1,972	**2,452**	**2,963**			0,37
3,571					0,33
4,053					0,31
WAF 344					
1,972	**2,452**	**2,963**			0,38
3,280	**3,571**				0,35
4,053					0,33
WAF 364L					
3,485	**3,933**	**4,481**	**4,920**	**5,435**	0,37
6,048					0,36
WAF 364					
3,485	**3,933**	**4,481**	**4,920**	**5,435**	0,38
6,048					0,37
WAF 374L					
6,120	**6,417**	**7,091**			0,37
7,476					0,34
WAF 374					
6,120	**6,417**	**6,739**	**7,091**		0,38
7,476					0,35
WAF 444L					
2,962	**3,522**				0,46
3,952					0,41
WAF 444					
2,962	**3,522**				0,48
3,952					0,42
WAF 464L					
4,000	**4,577**	**5,042**	**5,591**	**5,905**	0,46
WAF 464					
4,000	**4,577**	**5,042**	**5,591**		0,48
5,905					0,47

kg	kW	(BHP)	kW	(BHP)	kW	(BHP)
730	1900 rpm		2100 rpm		2300 rpm *	
	703	(943)	777	(1042)	851	(1141)
	627	(841)	693	(929)	759	(1018)
	589	(790)	651	(873)	713	(956)
730	1900 rpm		2100 rpm		2300 rpm *	
	722	(968)	798	(1070)	874	(1172)
	665	(892)	735	(986)	805	(1080)
	627	(841)	693	(929)	759	(1018)
810	1900 rpm		2100 rpm		2300 rpm *	
	703	(943)	777	(1042)	851	(1141)
	684	(917)	756	(1014)	828	(1110)
810	1900 rpm		2100 rpm		2300 rpm *	
	722	(968)	798	(1070)	874	(1172)
	703	(943)	777	(1042)	851	(1141)
1200	1900 rpm		2100 rpm		2300 rpm *	
	703	(943)	777	(1042)	851	(1141)
	646	(866)	714	(957)	782	(1049)
1200	1900 rpm		2100 rpm		2300 rpm *	
	722	(968)	798	(1070)	874	(1172)
	665	(892)	735	(986)	805	(1080)
760	1900 rpm		2100 rpm		2300 rpm *	
	874	(1172)	966	(1295)	1058	(1419)
	779	(1045)	861	(1155)	943	(1265)
760	1900 rpm		2100 rpm		2300 rpm *	
	912	(1223)	1008	(1352)	1104	(1480)
	798	(1070)	882	(1183)	966	(1295)
940	1900 rpm		2100 rpm		2300 rpm *	
	874	(1172)	966	(1295)	1058	(1419)
940	1900 rpm		2100 rpm		2300 rpm *	
	912	(1223)	1008	(1352)	1104	(1480)
	893	(1198)	987	(1324)	1081	(1450)

* max. input speed

Pleasure Duty

Reduction ratios: bold = standard,
italics and additional ratios on request

				kW/rpm
WAF 474L				
6,120	**6,417**	**7,091**	**7,476**	0,46
WAF 474				
6,120	**6,417**	**7,091**		0,48
7,476				0,47
WAF 563L				
4,545	**5,050**	**5,421**	**5,947**	0,57
WAF 563				
4,545	**5,050**	**5,421**	**5,947**	0,64

kg	kW	(BHP)	kW	(BHP)	kW	(BHP)
1830	**1900 rpm**		**2100 rpm**		**2300 rpm ***	
	874	(1172)	966	(1295)	1058	(1419)
1830	**1900 rpm**		**2100 rpm**		**2300 rpm ***	
	912	(1223)	1008	(1352)	1104	(1480)
	893	(1198)	987	(1324)	1081	(1450)
1445	**1900 rpm**		**2100 rpm**		**2300 rpm ***	
	1083	(1452)	1197	(1605)	1311	(1758)
1445	**1900 rpm**		**2100 rpm**		**2300 rpm ***	
	1216	(1631)	1344	(1802)	1472	(1974)

* max. input speed

Pleasure Duty

Reduction ratios: bold = standard,
italics and additional ratios on request

					kW/rpm
WVS 234/1	indicated max. rpm on request				
1,179	*1,500*	**2,036**	*2,542*		0,29
2,864					0,26
WVS 334	indicated max. rpm on request				
1,122					0,47
1,485	**2,037**				0,46
2,407	**2,538**				0,45
2,956					0,38
3,522					0,32
WVS 430/1	indicated max. rpm on request				
1,485	**2,037**	**2,458**	**2,773**		0,60
2,905					0,56
3,286					0,49
3,316					0,47
3,550					0,43
WVS 730/1L	indicated max. rpm on request				
2,036	**2,542**	**3,048**			0,70
3,542					0,65
3,954					0,55
WVS 730/1	indicated max. rpm on request				
2,036	**2,269**	**2,542**	**3,048**		0,95
3,542					0,84
3,954					0,76
WVS 930/1L	indicated max. rpm on request				
1,525	*2,032*	*2,482*	*3,044*		1,00
3,954					0,80
WVS 930/1	indicated max. rpm on request				
1,525	*2,032*	**2,482**			1,34
3,044					1,32
3,954					1,00
WVS 1130L	indicated max. rpm on request				
1,512	*2,029*	*2,433*	*2,962*	*3,478*	1,60

kg	kW	(BHP)	kW	(BHP)	kW	(BHP)
295	2100 rpm		2300 rpm		2600 rpm *	
	615	(825)	674	(904)	762	(1022)
	544	(729)	596	(799)	673	(903)
340	2100 rpm		2300 rpm		2600 rpm *	
	987	(1324)	1081	(1450)	1222	(1639)
	966	(1295)	1058	(1419)	1196	(1604)
	945	(1267)	1035	(1388)	1170	(1569)
	802	(1076)	879	(1178)	993	(1332)
	676	(907)	741	(993)	837	(1123)
490	2100 rpm		2300 rpm		2600 rpm *	
	1260	(1690)	1380	(1851)	1560	(2092)
	1176	(1577)	1288	(1727)	1456	(1952)
	1027	(1377)	1125	(1508)	1271	(1705)
	983	(1318)	1076	(1443)	1217	(1632)
	903	(1211)	989	(1326)	1118	(1499)
725	2100 rpm		2300 rpm		2500 rpm *	
	1470	(1971)	1610	(2159)	1750	(2347)
	1365	(1830)	1495	(2005)	1625	(2179)
	1155	(1549)	1265	(1696)	1375	(1844)
725	2100 rpm		2300 rpm		2500 rpm *	
	1995	(2675)	2185	(2930)	2375	(3185)
	1762	(2363)	1930	(2588)	2098	(2813)
	1602	(2149)	1755	(2353)	1908	(2558)
950	2100 rpm		2300 rpm		2500 rpm *	
	2100	(2816)	2300	(3084)	2500	(3352)
	1680	(2253)	1840	(2467)	2000	(2682)
950	2100 rpm		2300 rpm		2500 rpm *	
	2814	(3774)	3082	(4133)	3350	(4492)
	2772	(3717)	3036	(4071)	3300	(4425)
	2102	(2819)	2302	(3087)	2502	(3356)
1600	1800 rpm		1950 rpm		2300 rpm *	
	2880	(3862)	3120	(4184)	3680	(4935)

* max. input speed on request

Pleasure Duty

Reduction ratios: bold = standard,
italics and additional ratios on request

					kW/rpm
WVS 1130L	indicated max. rpm on request				
3,905					1,30
WVS 1130	indicated max. rpm on request				
1,512	*2,029*	*2,433*	*2,962*	*3,478*	1,90
3,905					
WVS 1540	indicated max. rpm on request				
2,952	**3,368**	**3,947**	**4,350**		1,50
4,632					1,46
WVS 1930	indicated max. rpm on request				
1,410	*2,032*	*2,458*	*2,952*	*3,368*	1,85
3,864					1,48
WVS 2230	indicated max. rpm on request				
1,513	*2,025*	*2,414*	*2,630*	*2,920*	2,51
WVS 2240	indicated max. rpm on request				
3,039	*3,375*	*3,565*	*3,818*	*4,130*	2,51

kg	kW	(BHP)	kW	(BHP)	kW	(BHP)
1600	**1800 rpm**		**1950 rpm**		**2300 rpm ***	
	2340	(3138)	2535	(3399)	2990	(4010)
1600	**1800 rpm**		**1950 rpm**		**2300 rpm ***	
	3420	(4586)	3705	(4968)	4370	(5860)
1450	**1800 rpm**		**1950 rpm**		**2300 rpm ***	
	2700	(3621)	2925	(3922)	3450	(4626)
	2630	(3527)	2849	(3820)	3360	(4506)
1550	**1800 rpm**		**1950 rpm**		**2300 rpm ***	
	3330	(4466)	3608	(4838)	4255	(5706)
	2671	(3582)	2894	(3881)	3413	(4577)
2150	**1800 rpm**		**1950 rpm**		**2100 rpm ***	
	4518	(6059)	4894	(6564)	5271	(7068)
2185	**1800 rpm**		**1950 rpm**		**2100 rpm ***	
	4518	(6059)	4894	(6564)	5271	(7068)

* max. input speed on request

Pleasure Duty

Reduction ratios: bold = standard,
italics and additional ratios on request

					kW/rpm
AF 264					
3,519	*4,083*	*4,500*			0,29
5,050					0,29
5,476					0,28
5,800					0,26
AF 344					
1,972	*2,452*	*2,963*			0,38
3,280	*3,571*				0,35
4,053					0,33
AF 364					
3,485	*3,933*	*4,481*	*4,920*	*5,435*	0,38
6,048					0,37

kg	kW	(BHP)	kW	(BHP)	kW	(BHP)
670	**1900 rpm**		**2100 rpm**		**2300 rpm ***	
	557	(747)	615	(825)	674	(904)
	551	(739)	609	(817)	667	(894)
	532	(713)	588	(789)	644	(864)
	494	(662)	546	(732)	598	(802)
700	**1900 rpm**		**2100 rpm**		**2300 rpm ***	
	722	(968)	798	(1070)	874	(1172)
	665	(892)	735	(986)	805	(1080)
	627	(841)	693	(929)	759	(1018)
770	**1900 rpm**		**2100 rpm**		**2300 rpm ***	
	722	(968)	798	(1070)	874	(1172)
	703	(943)	777	(1042)	851	(1141)

* max. input speed

Pleasure Duty

Reduction ratios: bold = standard,
italics and additional ratios on request

					kW/rpm
WLS 234/1	indicated max. rpm on request				
1,179	*1,500*	**2,036**	*2,542*		0,29
2,864					0,26
WLS 334	indicated max. rpm on request				
1,122					0,47
1,485	*2,037*				0,46
2,407	*2,538*				0,45
2,956					0,38
3,522					0,32
WLS 430/1	indicated max. rpm on request				
1,485	**2,037**	**2,458**	*2,773*		0,60
2,905					0,56
3,286					0,49
3,316					0,47
3,550					0,43
WLS 730/1	indicated max. rpm on request				
2,036	**2,269**	**2,542**	*3,048*		0,95
3,542					0,84
3,954					0,76
WLS 930/1	indicated max. rpm on request				
1,525	*2,032*	*2,482*			1,34
3,044					1,32
3,954					1,00
WLS 1130	indicated max. rpm on request				
1,512	*2,029*	*2,433*	*2,962*	*3,478*	1,90
3,905					

kg	kW	(BHP)	kW	(BHP)	kW	(BHP)
295	**2100 rpm**		**2300 rpm**		**2600 rpm ***	
	615	(825)	674	(904)	762	(1022)
	544	(729)	596	(799)	673	(903)
340	**2100 rpm**		**2300 rpm**		**2600 rpm ***	
	987	(1324)	1081	(1450)	1222	(1639)
	966	(1295)	1058	(1419)	1196	(1604)
	945	(1267)	1035	(1388)	1170	(1569)
	802	(1076)	879	(1178)	993	(1332)
	676	(907)	741	(993)	837	(1123)
490	**2100 rpm**		**2300 rpm**		**2600 rpm ***	
	1260	(1690)	1380	(1851)	1560	(2092)
	1176	(1577)	1288	(1727)	1456	(1952)
	1027	(1377)	1125	(1508)	1271	(1705)
	983	(1318)	1076	(1443)	1217	(1632)
	903	(1211)	989	(1326)	1118	(1499)
725	**2100 rpm**		**2300 rpm**		**2500 rpm ***	
	1995	(2675)	2185	(2930)	2375	(3185)
	1762	(2363)	1930	(2588)	2098	(2813)
	1602	(2149)	1755	(2353)	1908	(2558)
950	**2100 rpm**		**2300 rpm**		**2500 rpm ***	
	2814	(3774)	3082	(4133)	3350	(4492)
	2772	(3717)	3036	(4071)	3300	(4425)
	2102	(2819)	2302	(3087)	2502	(3356)
1600	**1800 rpm**		**1950 rpm**		**2300 rpm ***	
	3420	(4586)	3705	(4968)	4370	(5860)

* max. input speed on request

Pleasure Duty

Range of reduction ratios, italics and additional ratios on request					kW/rpm
VLJ 730/1					
1,539	*2,036*	**2,542**	**3,048**		0,95
VLJ 930/1					
1,186	*1,525*	**1,725**	**1,849**	*2,032*	1,29
2,357	*2,482*				
3,044					1,22

kg	kW	(BHP)	kW	(BHP)	kW	(BHP)
560	**1800 rpm**		**2100 rpm**		**2500 rpm ***	
	1710	(2293)	1995	(2675)	2375	(3185)
740	**1800 rpm**		**2100 rpm**		**2500 rpm ***	
	2322	(3114)	2709	(3633)	3225	(4325)
	2196	(2945)	2562	(3436)	3050	(4090)

* max. input speed

Main Dimensions

WAF

Reverse-reduction gearbox for propulsion with fixed pitch propeller

- Vertical offset
- Optional SAE housing

Size	B1	B2	H1	H2	H3	H4	D1	D2
164	505	660	315	290	370	-	55	285
244	530	640	240	215	355	-	55	240
264	540	670	345	315	365	-	55	285
274	700	830	420	380	365	-	55	325
344	570	720	265	250	395	-	60	285
364	580	750	380	345	415	-	60	325
374	800	930	460	410	430	-	60	325
444	495	740	285	270	505	-	75	300
464	575	800	400	375	510	-	75	325

WAF

Reverse-reduction gearbox for propulsion with fixed pitch propeller

- Vertical offset
- Optional SAE housing

Size	B1	B2	H1	H2	H3	H4	D1	D2
543	530	840	380	310	540	-	75	325
563	570	920	475	410	550	-	75	350

(all dimensions in mm)

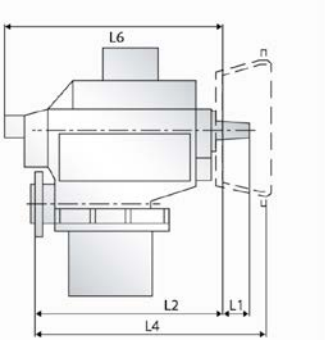

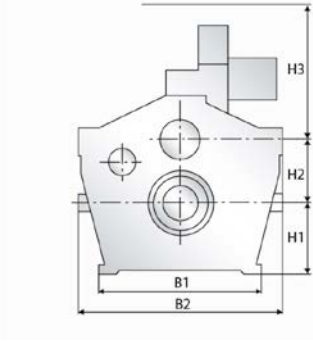

		SAE 1	SAE 0	SAE 00		
L1	L2	L4	L4	L4	L6	kg
70	595	658	658	-	685	525
70	560	627	627	-	685	455
70	595	658	658	-	685	700
70	600	666	666	-	690	725
80	645	750	750	-	740	730
80	665	773	773	-	755	810
80	670	773	773	-	860	1200
97	720	820	820	-	810	760
97	725	822	822	-	810	940

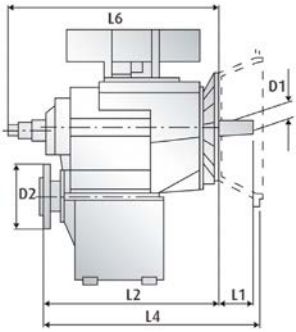

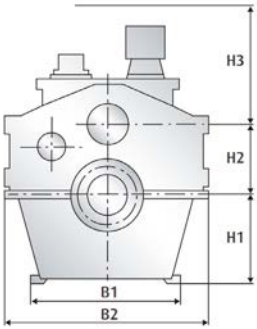

		SAE 1	SAE 0	SAE 00		
L1	L2	L4	L4	L4	L6	kg
97	775	-	895	911	935	1040
97	820	-	941	957	1060	1445

Main Dimensions

WAF

Reverse-reduction gearbox for propulsion with fixed pitch propeller

- Vertical offset
- Optional SAE housing

Size	B1	B2	H1	H2	H3	H4	D1	D2
474	760	1310	510	460	330	600	75	350
573	690	1360	575	505	500	645	75	375
665	430	1160	490	430	540	560	85	420
675	650	1480	610	550	540	680	85	420
743	610	1160	490	380	550	510	92	350
763	680	1300	530	490	550	630	92	375
773	790	1670	680	620	550	760	92	420

WVS/WLS

- Vertical offset
- Optional SAE housing

Size	B1	B2	H1	H2	H3	H4	D1	D2
234/1	475	640	200	200	420	-	55	220
334	530	720	240	215	420	-	62	180
430/1	400	730	260	235	390	-	75	220

(all dimensions in mm)

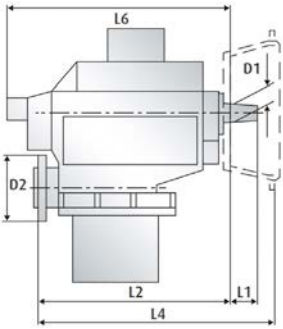

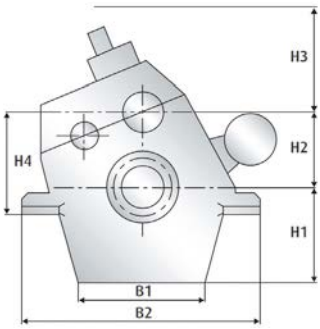

		SAE 1	SAE 0	SAE 00		
L1	L2	L4	L4	L4	L6	kg
97	745	-	844	-	810	1830
97	835	-	955	971	980	2365
101	881	-	1042	1042	1200	1950
101	892	-	1053	1053	1200	2600
107	933	-	-	1158	1190	1800
107	934	-	-	1159	1190	2300
107	951	-	-	-	1190	3200

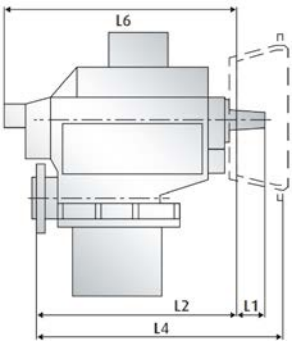

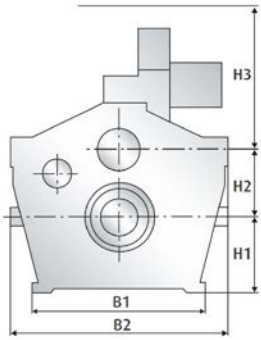

		SAE 1	SAE 0	SAE 00		
L1	L2	L4	L4	L4	L6	kg
69	483	64	-	-	680	295
100	564	109	109	-	700	340
-	675	60	102	-	840	490

Main Dimensions

LAF

Reduction gearbox for propulsion with controllable pitch propeller

- Vertical offset
- Optional SAE housing

Size	B1	B2	H1	H2	H3	H4	D1	D2
665	430	1160	490	430	540	560	85	420
675	650	1480	610	550	540	680	85	420
743	610	1160	490	380	550	510	92	350
763	680	1300	530	490	550	630	92	375
773	790	1670	680	620	550	760	92	420

WAF

Reverse-reduction gearbox for propulsion with fixed pitch propeller

- Vertical offset

Size	B1	B2	H1	H2	H3	H4
843	680	1300	530	425	550	565
863	705	1400	590	540	550	690
873	860	1650	750	670	550	710
1143	705	1400	590	450	650	600
1163	855	1520	660	590	650	750
1173	1000	1800	810	730	880	890
1543	855	1520	660	490	650	650

(all dimensions in mm)

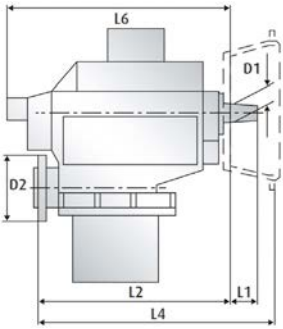

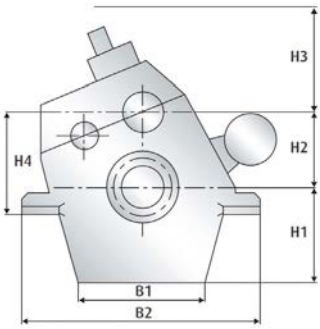

		SAE 1	SAE 0	SAE 00		
L1	L2	L4	L4	L4	L6	kg
101	881	-	1042	1042	1200	1800
101	892	-	1053	1053	1200	2450
107	933	-	-	1158	1190	1600
107	934	-	-	1159	1190	2100
107	951	-	-	-	1190	3000

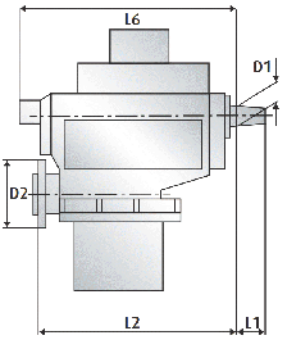

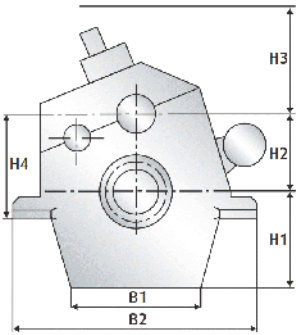

D1	D2	L1	L2	L6	kg
107	375	142	970	1280	2300
107	420	142	1000	1280	3100
107	480	142	1030	1280	4100
107	420	142	1053	1368	2750
107	480	142	1085	1368	3600
107	550	142	1008	1400	5000
117	480	154	1133	1413	3400

Main Dimensions

WAF

Reverse-reduction gearbox for propulsion with fixed pitch propeller

- Vertical offset

Size	B1	B2	H1	H2	H3	H4
1563	925	1620	675	630	650	790
1943	925	1620	675	485	600	645
1963	970	1680	720	675	600	845
1973	1000	2210	865	820	700	970
2346	730	1550	630	560	600	720
2355	920	1780	730	660	600	820
2365	1050	2120	770	760	600	920
2375	900	2120	875	865	700	1085
3445	790	1660	660	600	560	760
3455	930	1880	770	710	700	870
3465	930	2100	850	815	700	975
3475	1150	2380	970	925	700	1095
4545	930	1880	770	650	600	810
4555	960	1980	810	765	600	935
4566	1240	2400	935	885	730	1065
4575	1480	2750	1055	1010	730	1190
5645	1100	1980	810	690	700	860
5655	1275	2240	870	815	700	995
5666	1395	2420	980	935	700	1135
5675	1600	2700	1110	1055	700	1255
6745	1275	2240	870	735	950	915
6755	1280	2280	930	880	950	1080
6766	1500	2450	1040	1000	1000	1260
7740	1280	2280	930	800	900	1000
7750	1300	2300	910	900	900	1100
7760	1500	2450	1040	1050	1000	1310

(all dimensions in mm)

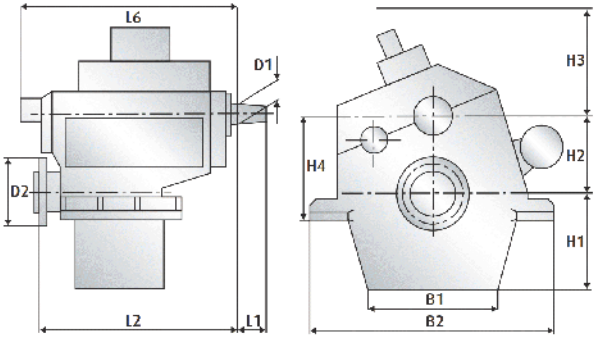

D1	D2	L1	L2	L6	kg
117	550	154	1163	1413	4460
127	550	162	1261	1556	4460
127	600	162	1281	1556	5540
127	650	162	1347	1700	8500
162	550	200	1475	1800	6000
162	600	200	1470	1800	7000
162	600	200	1470	1800	8000
162	650	200	1480	1800	10000
167	600	200	1540	1870	7100
167	650	200	1550	1870	8500
167	650	200	1550	1870	10400
167	670	200	1570	1870	11500
187	650	235	1630	1970	8900
187	670	235	1655	1970	10500
187	710	235	1695	2050	12600
187	710	235	1695	2050	14100
195	670	250	1725	2090	11600
195	710	250	1765	2090	13200
195	750	250	1870	2090	16000
195	800	250	1710	2090	18000
217	710	265	1870	2220	15000
217	750	265	1875	2220	17000
217	800	265	1915	2220	18000
217	750	305	1985	2390	17000
217	800	305	2030	2390	19000
217	900	305	2110	2390	20500

Main Dimensions

WAF

Reverse-reduction gearbox for propulsion with fixed pitch propeller

- Horizontal offset

Size	B1	B2	H1	H2	H3	H4
2346	1160	1980	600	560	1250	160
2355	1000	2180	680	660	1250	160
2365	1481	2100	770	760	1290	350
3445	1240	2060	660	600	1150	160
3455	1550	2430	770	710	1200	160
4545	1450	1950	710	650	1350	160
4555	1600	2470	820	765	1300	170
5666	1545	2050	740	690	1350	400
6745	1550	2150	780	735	1350	445
6755	1810	2590	920	880	1380	445

(all dimensions in mm)

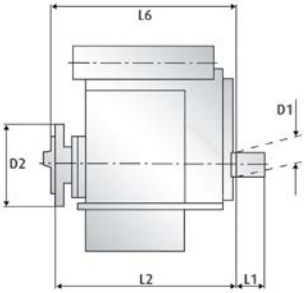

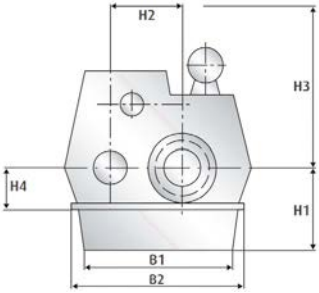

D1	D2	L1	L2	L6	kg
162	550	198	1485	1800	7200
162	600	198	1470	1800	7500
162	600	198	1470	1800	9400
167	600	198	1540	1880	8200
167	650	198	1550	1880	9800
187	650	237	1630	1970	10500
187	670	237	1655	1970	11800
197	670	251	1725	2080	13000
217	710	263	1875	2210	15200
217	750	263	1875	2210	17600

Main Dimensions

WVS

Reverse-reduction gearbox for propulsion with fixed pitch propeller

- Vertical offset

Size	B1	B2	H1	H2	H3	H4
730/1	650	1036	323	310	540	340
930/1	750	1166	348	340	560	385
1130	700	1350	435	425	650	440
1540	650	1300	390	390	700	405
1930	500	1340	400	390	650	405
2230	700	1500	500	460	550	475
2240	700	1500	500	460	550	475

LAF

Reduction gearbox for propulsion with controllable pitch propeller

- Vertical offset

Size	B1	B2	H1	H2	H3	H4
843	680	1300	530	425	550	565
863	705	1400	590	540	550	690
873	860	1650	750	670	550	710
1143	705	1400	590	450	650	600
1163	855	1520	660	590	650	750
1173	1000	1800	810	730	880	890

(all dimensions in mm)

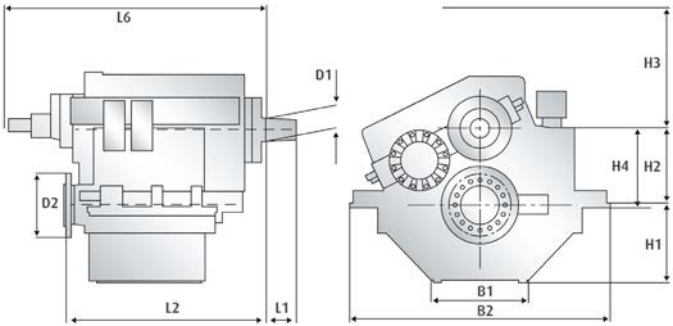

D1	D2	L1	L2	L6	kg
92	260	110	795	965	725
102	280	120	845	1024	950
117	350	157	1085	1255	1600
107	330	142	952	1375	1450
117	330	154	1032	1300	1550
127	350	162	1180	1480	2150
127	390	162	1180	1480	2185

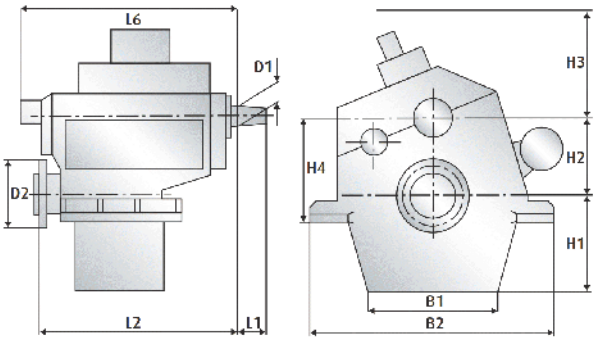

D1	D2	L1	L2	L6	kg
107	375	142	970	1280	2640
107	420	142	1000	1280	2850
107	480	142	1030	1280	3850
107	420	142	1053	1368	2450
107	480	142	1085	1368	3300
107	550	142	1008	1400	4600

Main Dimensions

LAF

Reduction gearbox for propulsion with controllable pitch propeller

- Vertical offset

Size	B1	B2	H1	H2	H3	H4
1543	855	1520	660	490	650	650
1563	925	1620	675	630	650	790
1943	925	1620	675	485	600	645
1963	970	1680	720	675	600	845
1973	1000	2210	865	820	700	970
2355	920	1780	730	660	600	820
3445	790	1660	660	600	560	760
3455	930	1880	770	710	700	870
3465	930	2100	850	815	700	975
3475	1150	2380	970	925	700	1095
4545	930	1880	770	650	750	810
4555	960	1980	810	765	750	935
4566	1240	2400	935	885	750	1065
4575	1480	2750	1055	1010	750	1190

(all dimensions in mm)

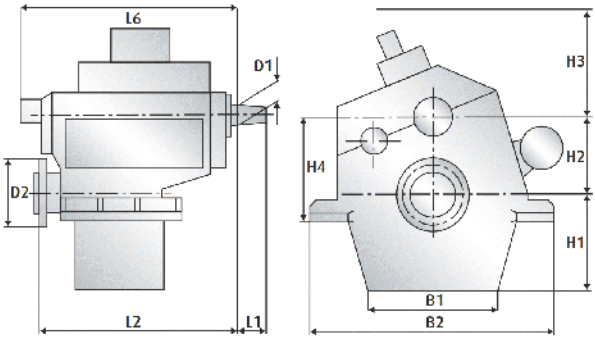

D1	D2	L1	L2	L6	kg
117	480	154	1133	1413	3000
117	550	154	1163	1413	4000
127	550	162	1261	1556	4060
127	600	162	1281	1556	4940
127	650	162	1347	1700	7580
162	600	200	1470	1800	6300
167	600	200	1540	1870	6400
167	650	200	1550	1870	7800
167	650	200	1550	1870	9700
167	670	200	1570	1870	10800
187	650	235	1630	1970	8000
187	670	235	1655	1970	9500
187	710	235	1695	2050	11100
187	710	235	1695	2050	13100

Main Dimensions

LAF

Reduction gearbox for propulsion with controllable pitch propeller

- Vertical offset

Size	B1	B2	H1	H2	H3	H4
2346	730	1550	630	560	600	720
2365	1050	2120	770	760	600	920
2375	900	2120	875	865	700	1085
5645	1100	1980	810	690	900	860
5655	1275	2240	870	815	900	995
5666	1395	2420	980	935	900	1135
5675	1600	2700	1110	1055	900	1255
6745	1275	2240	870	735	900	915
6755	1280	2280	930	880	900	1080
6766	1500	2450	1040	1000	900	1260
7740	1280	2280	930	800	900	1000
7750	1300	2300	910	900	900	1100
7760	1500	2450	1040	1050	900	1310

(all dimensions in mm)

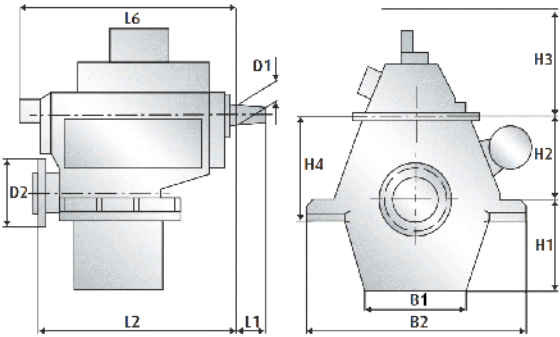

D1	D2	L1	L2	L6	kg
162	550	200	1475	1800	5200
162	600	200	1470	1800	7000
162	650	200	1480	1800	9200
195	670	250	1725	2090	9000
195	710	250	1765	2090	11800
195	750	250	1870	2090	13800
195	800	250	1710	2090	17000
217	710	265	1870	2220	12000
217	750	265	1875	2220	13800
217	800	265	1915	2220	17000
217	750	305	1985	2390	15500
217	800	305	2030	2390	16500
217	900	305	2110	2390	17500

Main Dimensions

LAF

Reduction gearbox for propulsion with controllable pitch propeller

- Horizontal offset

Size	B1	B2	H1	H2	H3	H4
2346	1160	1980	600	560	1250	160
2355	1000	2180	680	660	1250	160
2365	1481	2100	770	760	1290	350
3445	1240	2060	660	600	1150	160
3455	1550	2430	770	710	1200	160
4545	1450	1950	710	650	1350	160
4555	1600	2470	820	765	1300	170
5666	1545	2050	740	690	1350	400
6745	1550	2150	780	735	1350	445
6755	1810	2590	920	880	1380	445

WLS

Reduction gearbox for propulsion with controllable pitch propeller

- Vertical offset

Size	B1	B2	H1	H2	H3	H4
730/1	650	1036	323	310	540	340
930/1	750	1166	348	340	560	385
1130	700	1350	435	425	650	440

(all dimensions in mm)

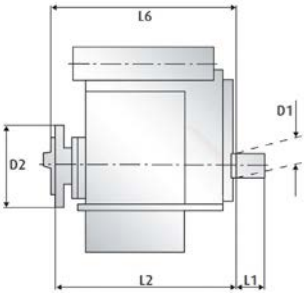

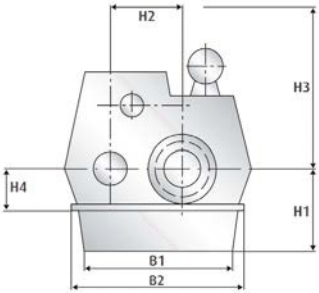

D1	D2	L1	L2	L6	kg
162	550	198	1485	1800	6500
162	600	198	1470	1800	6800
162	600	198	1470	1800	8600
167	600	198	1540	1880	7500
167	650	198	1550	1880	9100
187	650	237	1630	1970	9600
187	670	237	1655	1970	10800
197	670	251	1725	2080	12500
217	710	263	1875	2210	14200
217	750	263	1875	2210	16600

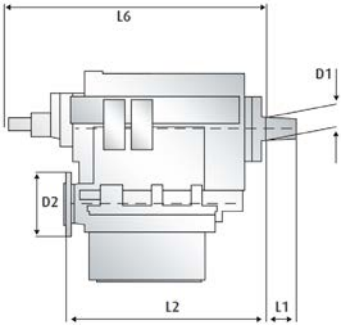

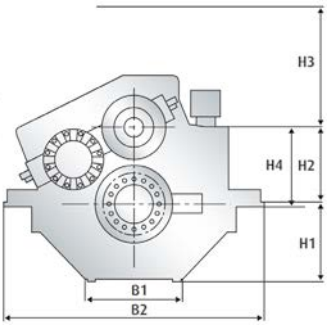

D1	D2	L1	L2	L6	kg
92	260	110	795	965	575
102	280	120	845	1024	750
117	350	157	1085	1255	1320

Main Dimensions

WLS

Reduction gearbox for propulsion with controllable pitch propeller

- Vertical offset

Size	B1	B2	H1	H2	H3	H4
1540	650	1300	390	390	700	405
1930	500	1340	400	390	650	405
2230	700	1500	500	460	550	475
2240	700	1500	500	460	550	475

VA

Reduction gearbox without clutch for propulsion with controllable pitch propeller

- Vertical offset

Size	B1	B2	H1	H2	H3	H4
2451	1090	1650	660	600	890	820
2741	800	1650	720	560	840	760
3451	1100	2000	860	720	860	940
3462	1720	2150	900	820	1080	1040
3541	1000	1780	760	630	840	850
4851	1230	2250	900	820	970	1040
4855	1220	2000	880	850	970	1130

(all dimensions in mm)

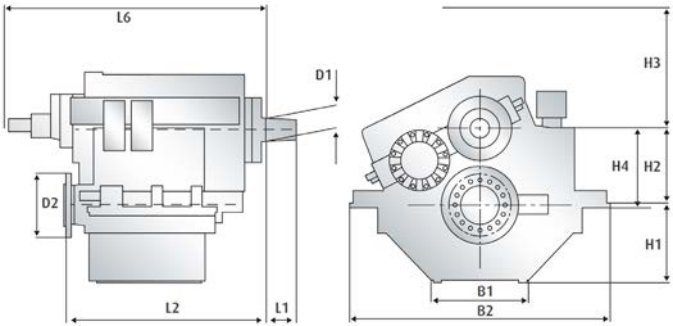

D1	D2	L1	L2	L6	kg
107	330	142	952	1375	1136
117	330	154	1032	1300	1214
127	350	162	1180	1480	1750
127	390	162	1180	1480	1830

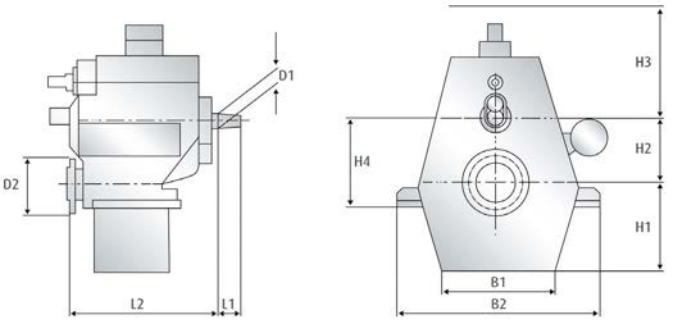

D1	D2	L1	L2	L6	kg
157	600	183	1487	-	5100
187	600	237	1407	-	5500
187	650	237	1450	-	8700
187	650	237	1666	-	10200
197	650	251	1485	-	7600
197	750	263	1566	-	12000
217	750	306	1626	-	12500

Main Dimensions

VA

Reduction gearbox without clutch for propulsion with controllable pitch propeller

- Horizontal offset

Size	B1	B2	H1	H2	H3	H4
2451	1535	1935	650	560	430	650
3451	1470	1890	810	720	455	940
3541	1340	1850	760	630	472	828
4855	2050	2460	880	900	500	1300

SVA

Reduction gearbox with slide bearings for propulsion with controllable pitch propeller

- Vertical offset

Size	B1	B2	H1	H2	H3	H4
630	1000	1810	790	630	455	550
750	1198	1870	870	750	500	550
800	1198	1870	870	800	500	550
850	1410	2240	1020	850	500	620
900	1410	2240	1020	900	570	750
950	1730	2340	1060	950	570	600
1000	1630	2440	1100	1000	570	650
1050	1730	2550	1100	1050	570	650
1120	1730	2560	1150	1120	650	730

(all dimensions in mm)

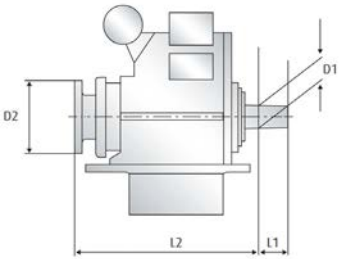

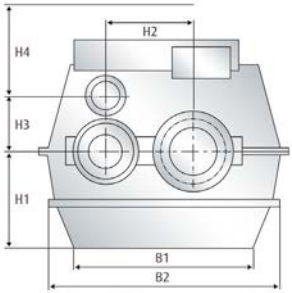

D1	D2	L1	L2	L6	kg
220	770	250	1700	-	5100
187	650	237	1747	-	8700
220	650	251	1600	-	7600
190	690	266	1934	-	12500

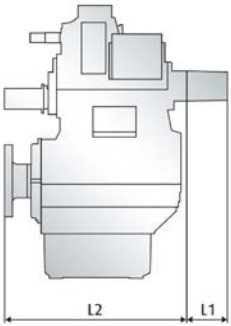

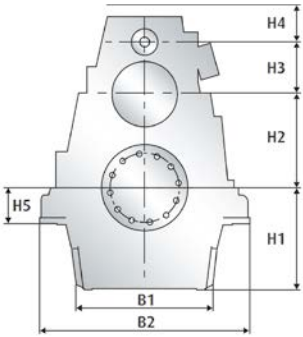

D1	D2	L1	L2	L6	kg
-	-	-	1550	-	7700
-	-	-	1663	-	8900
-	-	-	1850	-	10500
-	-	-	1977	-	16000
-	-	-	2066	-	17000
-	-	-	2250	-	17500
-	-	-	2180	-	19500
-	-	-	2180	-	21000
-	-	-	2300	-	22500

Main Dimensions

SVA

Reduction gearbox with slide bearings for propulsion with controllable pitch propeller

- Vertical offset

Size	B1	B2	H1	H2	H3	H4
1200	2112	3100	1245	1200	650	750
1250	1725	3100	1400	1250	650	490

DLG

Twin input/single output reduction gearbox with hydraulically operated clutches

- Horizontal offset
- Quoted power for size orientation only

Size	B1	B2	H1	H2	H3	H4
1113	2040	3050	1000	2000	1255	350
1116	1900	3000	1000	2000	1350	350
1120	1400	2400	815	1600	1200	380
1513	2040	3050	1000	2000	1250	350
1516	2400	3330	750	2250	1800	400
1525	2200	3250	1090	2200	1550	380
1913	2100	2780	1000	2000	1650	400
1916	2880	3400	1150	2500	1800	360
1925	2700	3500	1310	2500	1800	460
1931	2700	3900	1210	2300	1640	540
2316	2000	2800	1030	2300	1580	390

(all dimensions in mm)

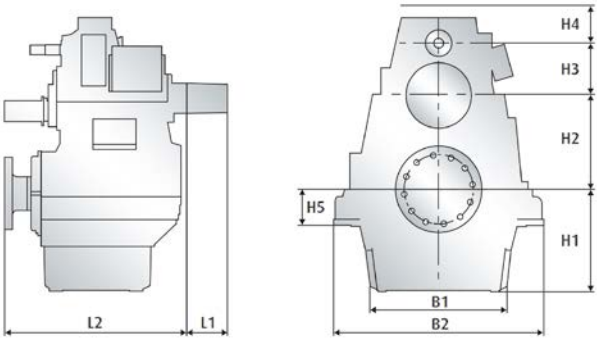

D1	D2	L1	L2	L6	kg
-	-	-	2260	-	31000
-	-	-	2504	-	34000

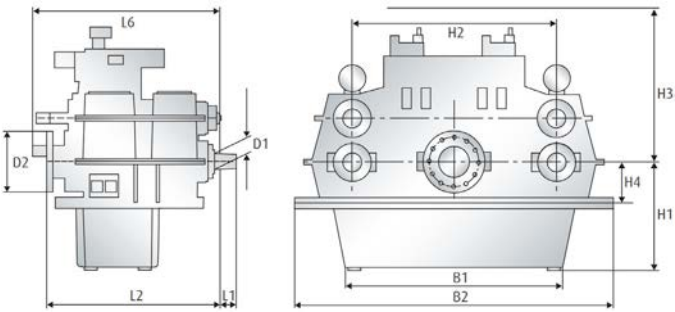

D1	D2	L1	L2	L6	kg	kW/rpm
107	620	142	1240	1430	9500	**3,26**
107	560	142	1450	1640	12000	**3,26**
107	650	142	1235	1450	8400	**3,26**
117	510	154	1510	1730	9500	**4,08**
117	600	154	1398	1650	13500	**4,08**
117	650	154	1480	1720	13800	**4,08**
127	550	162	1440	1750	10500	**4,40**
127	600	162	1450	1750	15000	**4,40**
127	670	162	1440	1750	16000	**4,40**
127	710	162	1735	2000	22500	**4,40**
162	600	198	1620	2000	19000	**4,90**

Main Dimensions

DLG

Twin input/single output reduction gearbox with hydraulically operated clutches

- Horizontal offset
- Quoted power for size orientation only

Size	B1	B2	H1	H2	H3	H4
3325	2250	3060	1250	2500	1500	440
3331	2080	3060	1250	2500	1500	440
4431	2700	3200	1260	2500	1750	450
4447	2800	3900	1300	2500	1730	500
5520	2800	3580	1250	2500	1800	500
5539	2100	3460	1315	2800	1700	640
5547	2800	3580	1250	2500	1800	640
5573	3300	4180	1410	2800	2050	800
6673	2900	4250	1400	2800	1850	675
7747	3300	4300	1250	2800	1770	550
7773	3200	4300	1250	2800	1800	550
8890	3250	4100	1425	2800	1750	500
9990	3000	5220	1550	3400	2050	750
110131	3000	5450	1550	3400	2050	750

(all dimensions in mm)

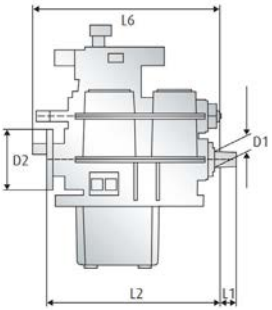

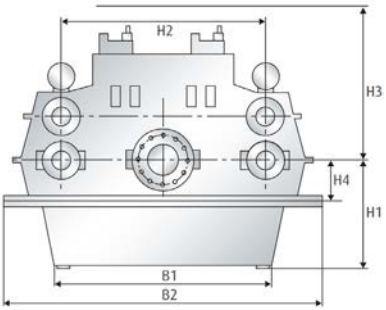

D1	D2	L1	L2	L6	kg	kW/rpm
167	770	198	1715	1920	19000	**6,50**
167	915	198	1765	1900	20000	**6,50**
187	710	237	1920	2210	24000	**7,60**
187	820	237	2090	2300	26000	**7,60**
197	650	251	1870	2115	28000	**10,00**
197	705	251	1995	2115	31000	**10,00**
197	800	251	2030	2400	28000	**10,00**
197	860	251	2300	2400	32000	**10,00**
217	860	263	2540	2350	37000	**12,00**
217	737	306	2255	2560	31000	**15,74**
217	750	306	2255	2560	31500	**15,74**
247	900	321	2370	2700	42000	**20,00**
247	900	321	2800	3000	51000	**27,00**
315	950	405	2435	3600	61000	**44,00**

Main Dimensions

RDG

Reduction gearbox without clutch for dredging pump

- Vertical offset

Size	B1	B2	B3	H1	H2	H3	H4
355	700	1060	-	410	355	600	150
400	900	1300	-	460	400	600	150
500	1000	1500	-	510	500	600	160

RDGL

Reduction gearbox with clutch for dredging pump

- Vertical offset

Size	B1	B2	B3	H1	H2	H3	H4
200	400	720	-	360	200	440	230
250	600	1000	-	460	250	550	350
320	800	1150	-	560	320	830	350
355	700	1060	-	410	355	650	150
600	1200	1800	-	660	600	800	200
800	1610	2200	-	740	800	850	160

(all dimensions in mm)

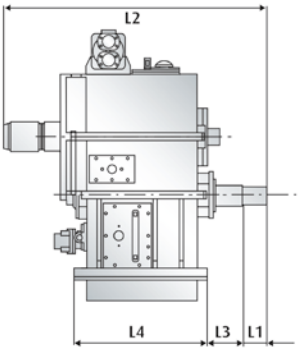

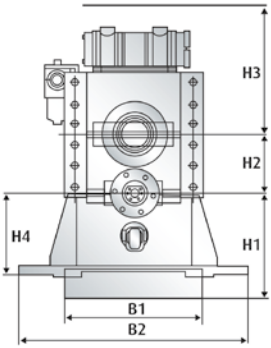

D1	D2	L1	L2	L3	kg
-	-	135	975	7	1300
-	-	107	1022	11	2000
-	-	107	1062	51	2450

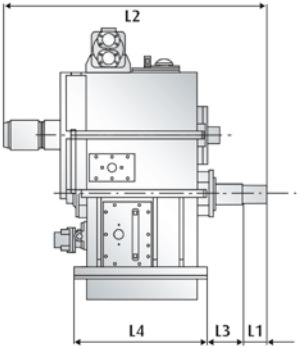

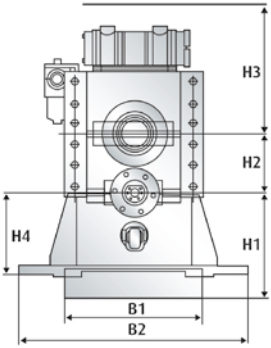

D1	D2	L1	L2	L3	kg
-	-	90	970	168	550
-	-	105	1177	160	1000
-	-	125	1435	173	1650
-	-	135	1335	347	1800
-	-	175	1625	401	4500
-	-	162	1462	300	7000

Main Dimensions

VLJ

Reduction gear for water jet propulsion

- Vertical offset

Size	B1	B2	B3	H1	H2	H3	H4
430	540	-	-	270	235	185	-
730/1	640	-	-	325	310	480	-
930/1	720	-	-	350	340	500	-
1130	850	-	-	425	425	570	-
1930	800	-	-	400	390	700	-
2230	920	-	-	460	460	600	-

VLJ

Reduction gear for water jet propulsion

- Horizontal offset

Size	B1	B2	B3	H1	H2	H3	H4
430	540	550	-	270	235	185	-
730/1	600	640	-	325	310	220	-
930/1	680	720	-	350	340	240	-
1130	720	850	-	425	425	270	-
1930	800	830	-	400	390	280	-
2230	760	920	-	460	460	300	-

(all dimensions in mm)

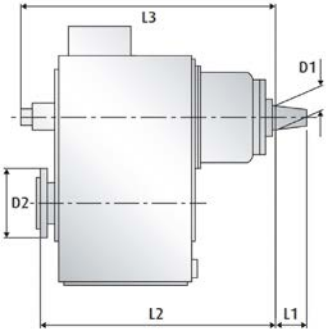

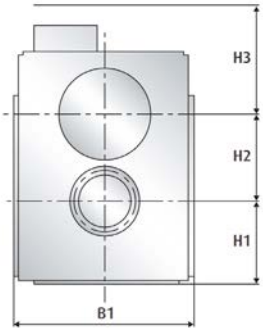

D1	D2	L1	L2	L3	kg
75	220	97	686	952	360
92	260	110	795	1000	560
102	280	120	870	1125	740
117	350	154	1095	1240	1300
117	330	154	1032	1300	1150
127	390	162	1150	1300	1600

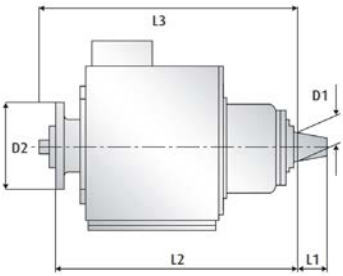

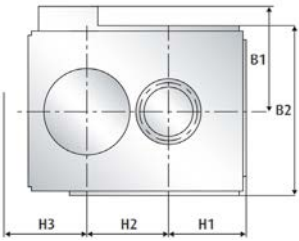

D1	D2	L1	L2	L3	kg
75	220	97	686	952	360
92	260	110	795	1000	560
102	280	120	870	1125	740
117	350	154	1095	1240	1300
117	330	154	1032	1300	1150
127	390	162	1150	1300	1600

Main Dimensions

VLJ

Reduction gear for water jet propulsion

- Horizontal offset

Size	B1	B2	B3	H1	H2	H3	H4
4431	1050	1750	660	550	560	800	180
6831	1170	1690	600	565	600	900	180
6841	1005	1945	735	640	650	1000	55
7531	1310	1850	680	600	630	990	180
7541	1320	1975	745	640	665	1000	60

Hybrid System WAF

Reverse-reduction gearbox for propulsion with fixed pitch propeller

- Vertical offset
- Remark: please consider also dimensions for frequency converter (page 176)

Size	Motor ekW	B1	B2	B3	D1	D2	D3
344	**HS06** 60	570	720	201	60	285	-
344	**HS10** 100	570	720	201	60	285	-

(all dimensions in mm)

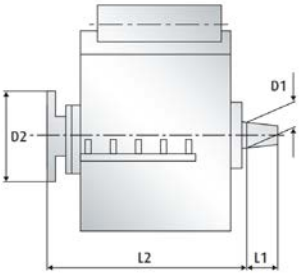

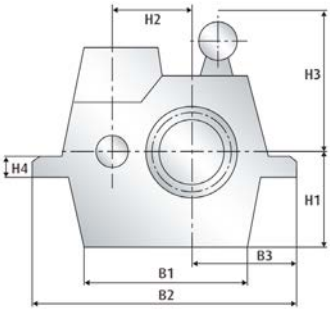

D1	D2	L1	L2	L3	kg
187	550	237	1600	-	3500
187	600	237	1500	-	3600
187	650	237	1635	-	4500
197	650	251	1700	-	4300
197	650	251	1700	-	4600

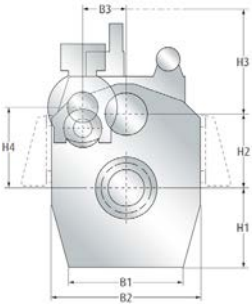

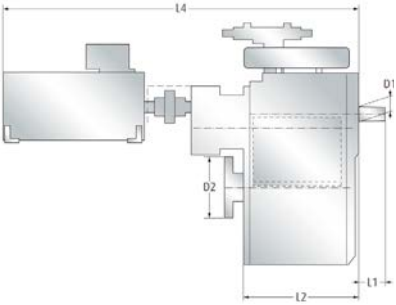

1) standard gearbox weight 2) weight with E-motor

H1	H2	H3	H4	H5	H6	H7
L1	L2	L3	L4		kg 1)	kg 2)
265	250	590	249	-	-	-
80	644	-	1492		-	1160
265	250	590	249	-	-	-
80	644	-	1712		-	1280

Main Dimensions

Hybrid System WAF

Reverse-reduction gearbox for propulsion with fixed pitch propeller

- Vertical offset
- Remark: please consider also dimensions for frequency converter (page 176)

Size	Motor	ekW	B1	B2	B3	D1	D2	D3
364	**HS06**	60	580	750	213	60	325	-
364	**HS10**	100	580	750	213	60	325	-
374	**HS06**	60	800	930	216	60	325	-
374	**HS10**	100	800	930	216	60	325	-
444	**HS06**	60	493	804	208	75	300	-
444	**HS10**	100	493	804	208	75	300	-
464	**HS06**	60	575	800	219	75	325	-
464	**HS10**	100	575	800	219	75	325	-
474	**HS06**	60	760	1040	223	75	350	-
474	**HS10**	100	760	1040	223	75	350	-

(all dimensions in mm)

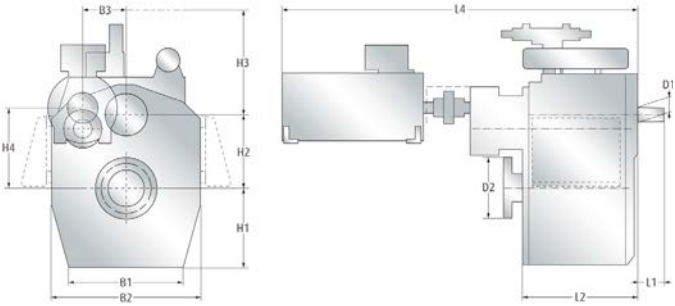

1) standard gearbox weight 2) weight with E-motor

H1	H2	H3	H4	H5	H6	H7
L1	L2	L3	L4		kg 1)	kg 2)
380	345	590	372	-	-	-
80	667	-	1509		-	1310
380	345	590	372	-	-	-
80	667	-	1729		-	1430
460	410	590	448	-	-	-
80	667	-	1509		-	1570
460	410	590	448	-	-	-
80	667	-	1729		-	1690
285	270	670	272	-	-	-
97	721	-	1630		-	1240
285	270	670	272	-	-	-
97	721	-	1850		-	1360
400	375	670	405	-	-	-
97	723	-	1630		-	1435
400	375	670	405	-	-	-
97	723	-	1850		-	1550
510	460	580	503	-	-	-
97	745	-	1630		-	1910
510	460	580	503	-	-	-
97	745	-	1850		-	2030

Main Dimensions

Hybrid System WAF

Reverse-reduction gearbox for propulsion with fixed pitch propeller

- Vertical offset
- Remark: please consider also dimensions for frequency converter (page 176)

Size	Motor	B1	B2	B3	D1	D2	D3
	ekW						
543	**HS06**	535	840	229	75	325	-
	60						
543	**HS10**	535	840	229	75	325	-
	100						
563	**HS06**	570	920	238	75	350	-
	60						
563	**HS10**	570	920	238	75	350	-
	100						
573	**HS06**	690	1080	242	75	375	-
	60						
573	**HS10**	690	1080	242	75	375	-
	100						

(all dimensions in mm)

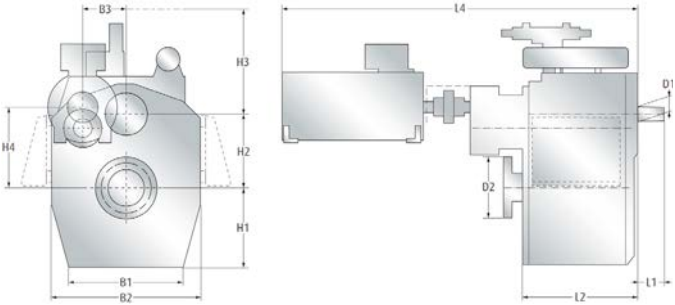

1) standard gearbox weight 2) weight with E-motor

H1	H2	H3	H4	H5	H6	H7
L1	L2	L3	L4		kg 1)	kg 2)
380	310	735	309	-	-	-
97	776	-	1748		-	1560
380	310	735	309	-	-	-
97	776	-	1968		-	1680
475	410	700	434	-	-	-
97	822	-	1748		-	1850
475	410	700	434	-	-	-
97	822	-	1968		-	1970
575	505	590	543	-	-	-
97	836	-	1748		-	2350
575	505	590	543	-	-	-
97	836	-	1968		-	2470

Main Dimensions

Hybrid System WAF

Reverse-reduction gearbox for propulsion with fixed pitch propeller

- Vertical offset
- Remark: please consider also dimensions for frequency converter (page 176)

Size	Motor ekW	B1	B2	B3	D1	D2	D3
665	**HS20** 200	430	1160	-	85	420	80
665	**HS31** 315	430	1160	-	85	420	80
665	**HS40** 400	430	1160	-	85	420	80
675	**HS20** 200	650	1480	-	85	420	80
675	**HS31** 315	650	1480	-	85	420	80
675	**HS40** 400	650	1480	-	85	420	80
743	**HS20** 200	610	1160	-	92	350	100
743	**HS31** 315	610	1160	-	92	350	100
743	**HS40** 400	610	1160	-	92	350	100
743	**HS50** 500	610	1160	-	92	350	100

(all dimensions in mm)

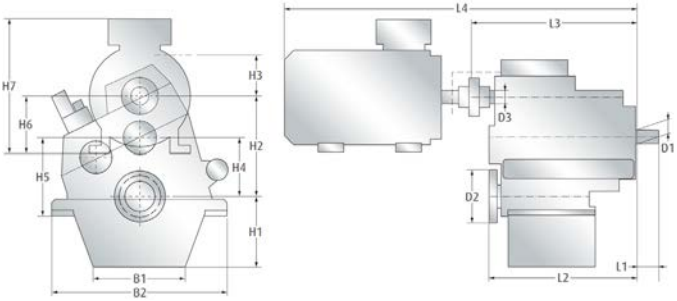

1) standard gearbox weight 2) weight with E-motor

H1	H2	H3	H4	H5	H6	H7
L1	L2	L3	L4		kg 1)	kg 2)
490	680	250	430	560	315	765
101	979	1085	2390		2400	3600
490	680	250	430	560	315	800
101	979	1085	2555		2400	4050
490	680	250	430	560	355	990
101	979	1085	2680		2400	4500
610	800	250	550	680	315	765
101	990	1085	2390		3000	4200
610	800	250	550	680	315	800
101	990	1085	2555		3000	4650
610	800	250	550	680	355	990
101	990	1085	2680		3000	5100
490	680	300	380	510	315	765
107	1046	1186	2490		2300	3500
490	680	300	380	510	315	800
107	1046	1186	2655		2300	3950
490	680	300	380	510	355	990
107	1046	1186	2785		2300	4400
490	680	300	380	510	355	940
107	1046	1186	2895		2300	4870

Main Dimensions

Hybrid System WAF

Reverse-reduction gearbox for propulsion with fixed pitch propeller

- Vertical offset
- Remark: please consider also dimensions for frequency converter (page 176)

Size	Motor ekW	B1	B2	B3	D1	D2	D3
743	**HS63** 630	610	1160	-	92	350	100
763	**HS20** 200	680	1300	-	92	375	100
763	**HS31** 315	680	1300	-	92	375	100
763	**HS40** 400	680	1300	-	92	375	100
763	**HS50** 500	680	1300	-	92	375	100
763	**HS63** 630	680	1300	-	92	375	100
773	**HS20** 200	790	1670	-	92	420	100
773	**HS31** 315	790	1670	-	92	420	100
773	**HS40** 400	790	1670	-	92	420	100
773	**HS50** 500	790	1670	-	92	420	100

(all dimensions in mm)

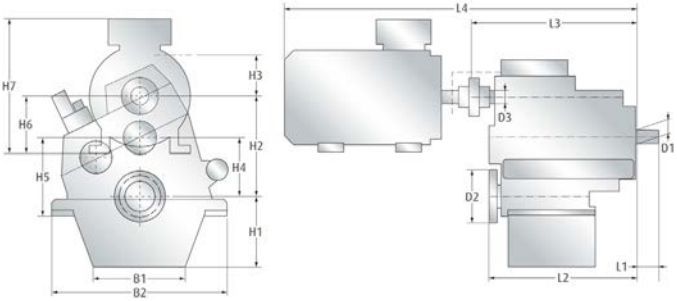

1) standard gearbox weight 2) weight with E-motor

H1	H2	H3	H4	H5	H6	H7
L1	L2	L3	L4		kg 1)	kg 2)
490	680	300	380	510	400	970
107	1046	1186	3125		2300	5610
530	790	300	490	630	315	765
107	1047	1187	2490		2800	4000
530	790	300	490	630	315	800
107	1047	1187	2655		2800	4450
530	790	300	490	630	355	990
107	1047	1187	2785		2800	4900
530	790	300	490	630	355	940
107	1047	1187	2893		2800	5370
530	790	300	490	630	400	970
107	1047	1187	3125		2800	6110
680	920	300	620	760	315	765
107	1064	1204	2510		3700	4900
680	920	300	620	760	315	800
107	1064	1204	2670		3700	5350
680	920	300	620	760	355	990
107	1064	1204	2800		3700	5800
680	920	300	620	760	355	940
107	1064	1204	2910		3700	6270

Main Dimensions

Hybrid System WAF

Reverse-reduction gearbox for propulsion with fixed pitch propeller

- Vertical offset
- Remark: please consider also dimensions for frequency converter (page 176)

Size	Motor ekW	B1	B2	B3	D1	D2	D3
773	**HS63** 630	790	1670	-	92	420	100
843	**HS20** 200	680	1300	-	107	375	100
843	**HS31** 315	680	1300	-	107	375	100
843	**HS40** 400	680	1300	-	107	375	100
843	**HS50** 500	680	1300	-	107	375	100
843	**HS63** 630	680	1300	-	107	375	100
863	**HS20** 200	705	1400	-	107	420	100
863	**HS31** 315	705	1400	-	107	420	100
863	**HS40** 400	705	1400	-	107	420	100
863	**HS50** 500	705	1400	-	107	420	100

(all dimensions in mm)

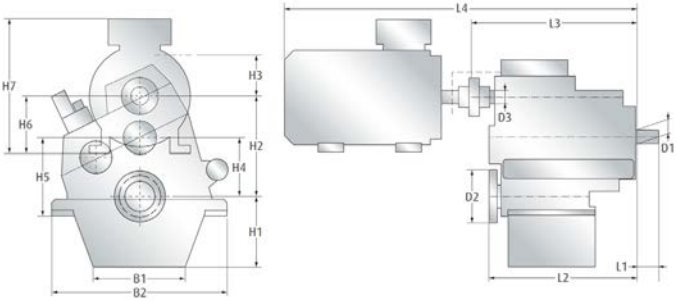

1) standard gearbox weight 2) weight with E-motor

H1	H2	H3	H4	H5	H6	H7
L1	L2	L3	L4		kg 1)	kg 2)
680	920	300	620	760	400	970
107	1064	1204	3140		3700	7010
530	725	350	425	565	315	765
142	1090	1224	2530		2900	4100
530	725	350	425	565	315	800
142	1090	1224	2690		2900	4550
530	725	350	425	565	355	990
142	1090	1224	2820		2900	5000
530	725	350	425	565	355	940
142	1090	1224	2930		2900	5470
530	725	350	425	565	400	970
142	1090	1224	3160		2900	6210
590	840	350	540	690	315	765
142	1120	1254	2560		3600	4800
590	840	350	540	690	315	800
142	1120	1254	2720		3600	5250
590	840	350	540	690	355	990
142	1120	1254	2850		3600	5700
590	840	350	540	690	355	940
142	1120	1254	2960		3600	6170

Main Dimensions

Hybrid System WAF

Reverse-reduction gearbox for propulsion with fixed pitch propeller

- Vertical offset
- Remark: please consider also dimensions for frequency converter (page 176)

Size	Motor ekW	B1	B2	B3	D1	D2	D3
863	**HS63** 630	705	1400	-	107	420	100
873	**HS20** 200	860	1650	-	107	480	100
873	**HS31** 315	860	1650	-	107	480	100
873	**HS40** 400	860	1650	-	107	480	100
873	**HS50** 500	860	1650	-	107	480	100
873	**HS63** 630	860	1650	-	107	480	100

(all dimensions in mm)

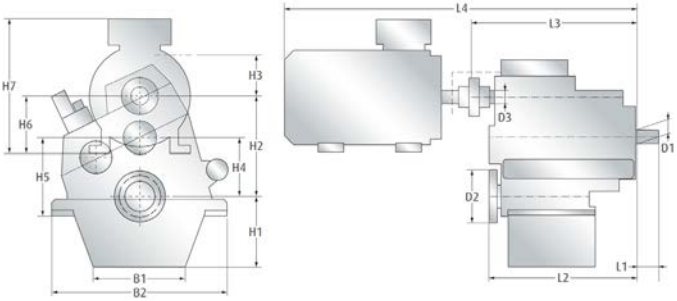

1) standard gearbox weight 2) weight with E-motor

H1	H2	H3	H4	H5	H6	H7
L1	L2	L3	L4		kg 1)	kg 2)
590	840	350	540	690	400	970
142	1120	1254	3190		3600	6910
750	970	350	670	710	315	765
142	1150	1284	2590		4600	5800
750	970	350	670	710	315	800
142	1150	1284	2750		4600	6250
750	970	350	670	710	355	990
142	1150	1284	2880		4600	6700
750	970	350	670	710	355	940
142	1150	1284	2990		4600	7170
750	970	350	670	710	400	970
142	1150	1284	3220		4600	7910

Main Dimensions

Hybrid System WVS

Reverse-reduction gearbox for propulsion with fixed pitch propeller

- Vertical offset
- Remark: please consider also dimensions for frequency converter (page 176)

Size	Motor ekW	B1	B2	B3	D1	D2	D3
730	**HS20** 200	650	1036	-	92	260	80
730	**HS31** 315	650	1036	-	92	260	80
730	**HS40** 400	650	1036	-	92	260	80
930	**HS20** 200	750	1166	-	102	280	100
930	**HS31** 315	750	1166	-	102	280	100
930	**HS40** 400	750	1166	-	102	280	100
930	**HS50** 500	750	1166	-	102	280	100
930	**HS63** 630	750	1166	-	102	280	100
1540	**HS20** 200	650	1300	-	107	330	100
1540	**HS31** 315	650	1300	-	107	330	100

(all dimensions in mm)

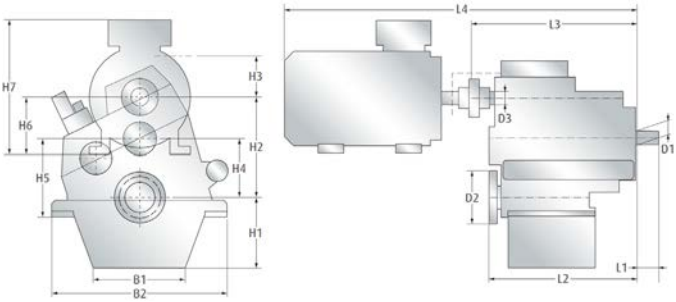

1) standard gearbox weight 2) weight with E-motor

H1	H2	H3	H4	H5	H6	H7
L1	L2	L3	L4		kg 1)	kg 2)
373	560	250	310	340	315	765
110	893	1075	2380		1000	2200
373	560	250	310	340	315	800
110	893	1075	2545		1000	2650
373	560	250	310	340	355	990
110	893	1075	2670		1000	3100
398	620	250	340	385	315	765
120	961	1152	2455		1300	2500
398	620	250	340	385	315	800
120	961	1152	2620		1300	2950
398	620	250	340	385	355	990
120	961	1152	2750		1300	3400
398	620	250	340	385	355	940
120	961	1152	2860		1300	3870
398	620	250	340	385	400	970
120	961	1152	3090		1300	4610
440	690	300	390	405	315	765
142	1065	1179	2485		1800	3000
440	690	300	390	405	315	800
142	1065	1179	2645		1800	3450

Main Dimensions

Hybrid System WVS

Reverse-reduction gearbox for propulsion with fixed pitch propeller

- Vertical offset
- Remark: please consider also dimensions for frequency converter (page 176)

Size	Motor ekW	B1	B2	B3	D1	D2	D3
1540	**HS40** 400	650	1300	-	107	330	100
1540	**HS50** 500	650	1300	-	107	330	100
1540	**HS63** 630	650	1300	-	107	330	100

(all dimensions in mm)

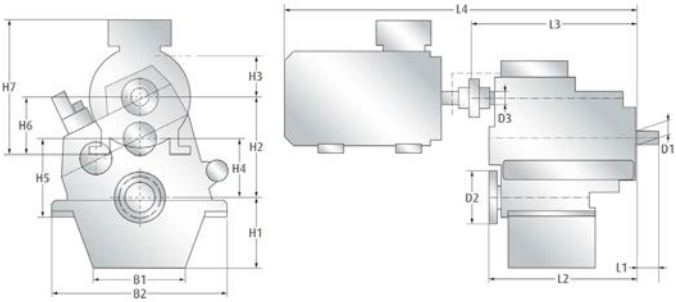

1) standard gearbox weight 2) weight with E-motor

H1	H2	H3	H4	H5	H6	H7
L1	L2	L3	L4		kg 1)	kg 2)
440	690	300	390	405	355	990
142	1065	1179	2775		1800	3900
440	690	300	390	405	355	940
142	1065	1179	2885		1800	4370
440	690	300	390	405	400	970
142	1065	1179	3115		1800	5110

Main Dimensions

Frequency Converter for Hybrid Application

Hybrid System		Converter 1 (PTI/Booster)			
Type	Motor ekW	a mm	b mm	c mm	Weight kg
HS06	60	555	1000	325	100
HS10	100	600	1600	500	190
HS20	200	600	1800	500	260
HS31	315	1000	2000	600	420
HS40	400	1200	2050	600	800
HS50	500	1200	2050	600	830
HS63	630	1600	2050	600	1100

(all dimensions in mm)

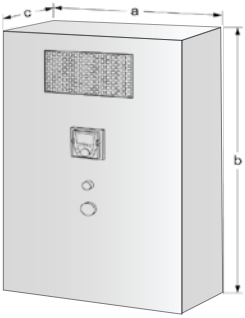

Converter 2 (PTO/PTI/Booster)			
a mm	b mm	c mm	Weight kg
555	1800	600	180
600	1800	600	320
600	1800	600	470
1000	2050	600	840
1200	2050	600	1400
1200	2050	600	1500
1600	2050	600	1750

Marine Propulsion Packages

Based on REINTJES Gearboxes

can consist of multiple features like

- Propeller
- Shafts (incl. tail shaft and intermediate shaft)
- Shafting arrangement and calculations
- Couplings
- PTI / PTO
- Hybrid Package
  (incl. electric motor and frequency converter)
- Control system
- Monitoring system
- Powertrain consultancy
- and more

CPP

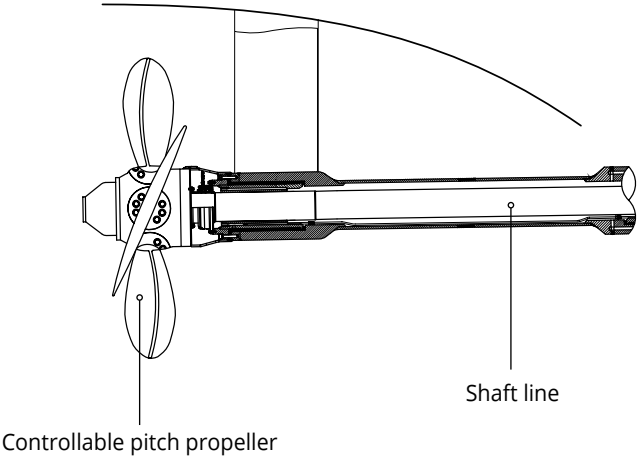

REINTJES offers various packages independently from other suppliers. The expertise developed by REINTJES in more than 100 years of experience in marine Powertrain Solutions and the strong network within marine industry enable REINTJES to find the best package solution for your demand. Please contact our sales team for your customised marine package.

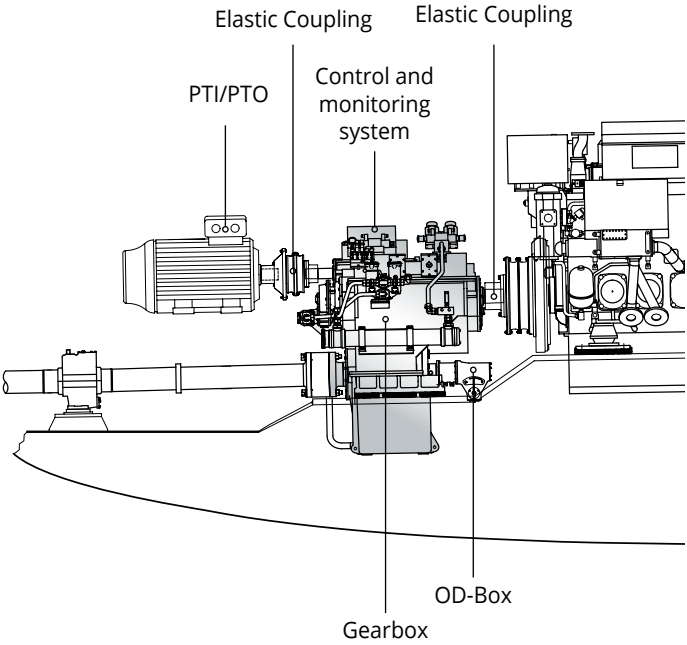

Marine Propulsion Packages

Based on REINTJES Gearboxes

can consist of multiple features like

- Propeller
- Shafts (incl. tail shaft and intermediate shaft)
- Shafting arrangement and calculations
- Couplings
- PTI / PTO
- Hybrid Package
  (incl. electric motor and frequency converter)
- Control system
- Monitoring system
- Powertrain consultancy
- and more

FPP

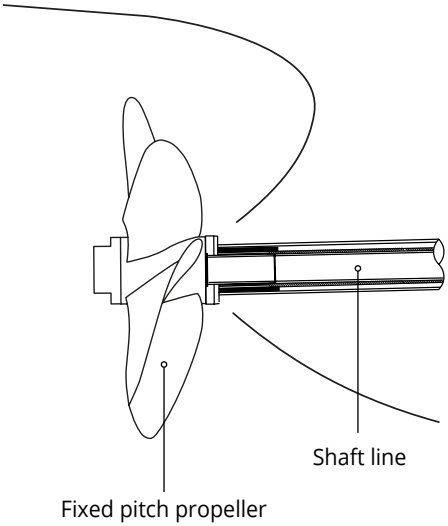

REINTJES offers various packages independently from other suppliers. The expertise developed by REINTJES in more than 100 years of experience in marine Powertrain Solutions and the strong network within marine industry enable REINTJES to find the best package solution for your demand. Please contact our sales team for your customised marine package.

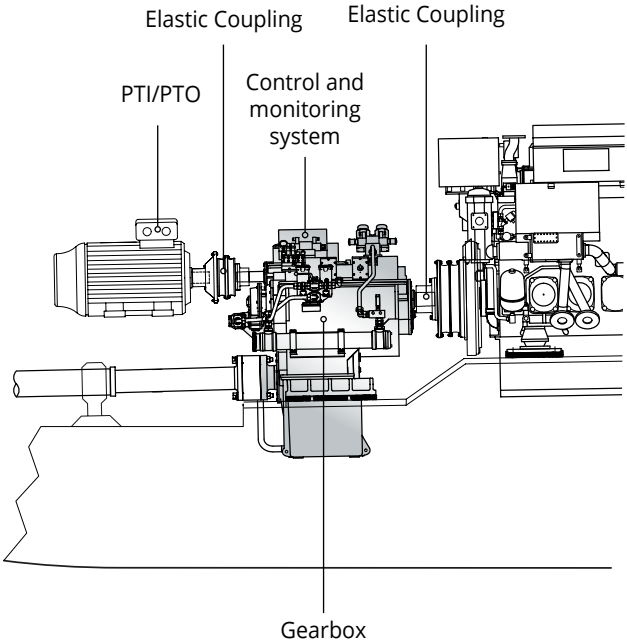

Navy Applications

A LAF Gear with Naval Features* (Example)

*Available on request for other gears

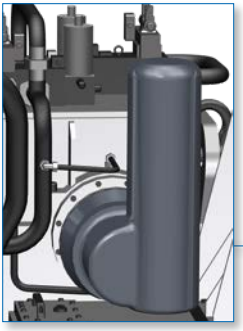

Double Helical Toothing

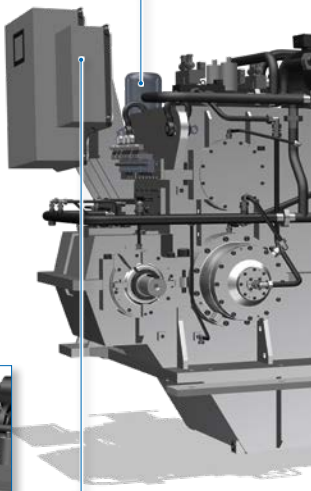

Turn Drive

The turn drive allows turning the propeller shaft even when the main engine is standing still, e.g. for maintenance work.

- Operation with a control panel and with a remote control
- Current status can be monitored and visualised with the LOP

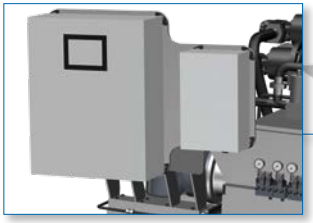

Local Operating Panel (LOP)

The LOP can be used for various purposes including:

- Control of the clutch(es)
- Control of electric oil pumps
- Monitoring alarms, operating conditions, and values such as pressure, speed etc.
- Operation of special equipment such as turn drive, shaft locking device, and oil pre-heater

The LOP control cabinet comes with a TFT display with a customised menu structure.

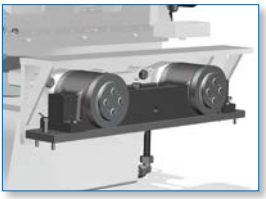

Resilient Mounting of Gearbox and Accessories

Oil Pre-Heater

The oil pre-heater heats up the oil to a temperature of > 25 °C.

- Manual and automatic operation are both possible
- Current status can be monitored and visualised with the LOP

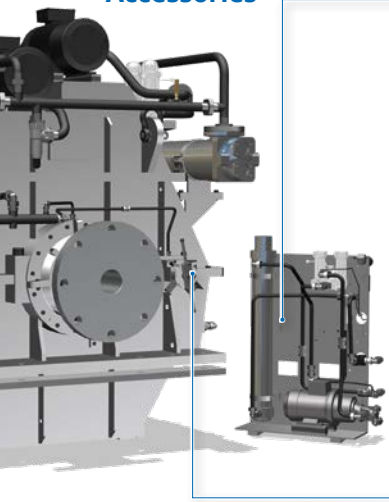

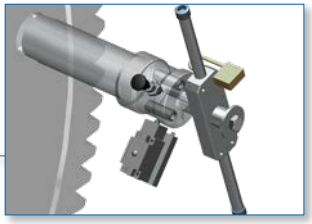

De-Humidifier

Drying of incoming air

- Oil level in gear decrease
- Moist air will be sucked in
- Valves opens at 5 mbar
- Incoming air will be dried
- Silica gel changes color from orange to green
- Incoming air will be cleaned

Shaft Locking Device

With the shaft locking device the propeller shaft can be mechanically locked and therefore be secured in its position.

- Spring-loaded
- Easy-to-operate
- Current status can be monitored and visualised with the LOP

Type Classification

REINTJES Product Portfolio

WAF
Wendeuntersetzungsgetriebe
(reverse reduction gearbox)
Achsversetzt
(shafts offset)
An**F**lanschausführung
(version with flange)

WGF
Wendeuntersetzungs**G**etriebe aus WAF (reverse reduction gearbox derived from WAF)
Vorsatzstufe ange**F**lanscht
(flange-connected housing for two-step gearbox)

WGV
Wendeuntersetzungsgetriebe
(reverse reduction gearbox)
Gleichachsig
(co-axial shaft arrangement)
Zwischenwellen **V**ersetzt
(intermediate shafts offset)

WVS
Wendeuntersetzungsgetriebe
(reverse reduction gearbox)
Achs**V**ersetzt
(shafts offset)
für **S**chnelle Schiffe
(for fast vessels)

WVSA
WVS in Down-**A**ngle-Ausführung
(WVS in down angle design)

ZWAF
Zweigang-**W**endeuntersetzungs-getriebe
(two-speed reverse reduction gearbox)
Achsversetzt
(shafts offset)
An**F**lanschausführung
(version with flange)

ZWVS
Zweigang-Wendeuntersetzungsgetriebe aus **WVS**
(two-speed reverse reduction gearbox derived from WVS)

ZWVSA
Zweigang-Wendeuntersetzungsgetriebe aus **WVSA**
(two-speed reverse reduction gearbox derived from WVSA)

ZSVAL
Zweigang-Untersetzungsgetriebe
(two-speed reduction gearbox)
Slide bearings
(slide bearings)
Verstellpropeller
(for controllable pitch propeller)
Achsversetzt
(shafts offset)
mit **L**amellenkupplung
(with disc clutch)

AF
Achsversetzt
(shafts offset)
An**F**lanschausführung
(version with flange)

LAF
Untersetzungsgetriebe
mit **L**amellenkupplung
(reduction gearbox with disc clutch)
Achsversetzt
(shaft offset)
An**F**lanschausführung
(version with flange)

LGF
Untersetzungsgetriebe mit **L**amellenkupplung
(reduction gearbox with disc clutch)
ähnlich W**G**F
(like WGF)
Vorsatzstufe ange**F**lanscht
(flange-connected housing for two-step gearboxes)

WLS
Untersetzungsgetriebe aus **WVS**
(reduction gearbox derived from WVS)
mit **L**amellenkupplung (with disc clutch)

VLJ
Achs**V**ersetztes Untersetzungsgetriebe
(reduction gearbox with offset shafts)
mit **L**amellenkupplung
(with disc clutch)
für Water**J**et
(for water-jet)

VA
Untersetzungsgetriebe für **V**erstellpropeller
(reduction gearbox for controllable pitch propeller)
Achsversetzt
(shafts offset)

SVA
Untersetzungsgetriebe mit
„**S**lide bearings“
(reduction gearbox with slide bearings)
Verstellpropeller
(for controllable pitch propeller)
Achsversetzt
(shafts offset)

SVAL
Untersetzungsgetriebe mit
„**S**lide bearings“
(reduction gearbox with slide bearings)
Verstellpropeller
(for controllable pitch propeller)
Achsversetzt
(shafts offset)
mit **L**amellenkupplung
(with disc clutch)

SVLJ
Untersetzungsgetriebe mit
„**S**lide bearings“
(reduction gearbox with slide bearings)
Achs**V**ersetzt
(with offset shafts)
mit **L**amellenkupplung
(with disc clutch)
für Water**J**et
(for water-jet)

DLG
Doppeluntersetzungsgetriebe
(twin input/single output reduction gearbox)
mit **L**amellenkupplung
(with disc clutch)
Gleiche Höhe
(same height of the input shafts)

DLGF
Doppeluntersetzungsgetriebe
(twin input/single output reduction gearbox)
mit **L**amellenkupplung
(with disc clutch)
Gleiche Höhe
(same height of the input shafts)
An**F**lanschausführung (version with flange)

DUG
Doppel**U**ntersetzungsgetriebe
(twin input/single output reduction gearbox)
Horizontal, **g**leiche Höhe
(horizontal, equal height)

DVLJ
Doppeluntersetzungsgetriebe
(twin input/single output reduction gearbox)
Achs**V**ersetzt
(shafts offset)
mit **L**amellenkupplung
(with disc clutch)
für Water**J**et
(for water-jet)

RDG
REINTJES **D**redging **G**earbox
(REINTJES Dredging Gearbox)

RDGL
REINTJES **D**redging **G**earbox
(REINTJES Dredging Gearbox)
mit **L**amellenkupplung
(with disc clutch)

Abbreviations used after the Type designation

L
Limited torque version of gearbox type

DL
Diagonal **L**eft offset of input shaft in view of output shaft

DR
Diagonal **R**ight offset of input shaft in view of output shaft

HL
Horizontal **L**eft offset of input shaft in view of output shaft

HR
Horizontal **R**ight offset of input shaft in view of output shaft

U
U – Drive, input and output on the same side

HSnn
Hybrid **S**ystem, gearbox with electrical motor of 10 x **nn** ekW

REINTJES
POWERTRAIN SOLUTIONS

REINTJES GmbH
Eugen-Reintjes-Straße 7
31785 Hameln
Germany
Phone +49 5151 104-0
Fax +49 5151 104-300
E-mail info@reintjes-gears.de
www.reintjes-gears.com

Please scan
QR code to locate us

die querdenker • 21/19700-120 | Stand 02/2021

24 Service Hotline: + 49 5151 104-104